YAMAHA
Golf Car Company

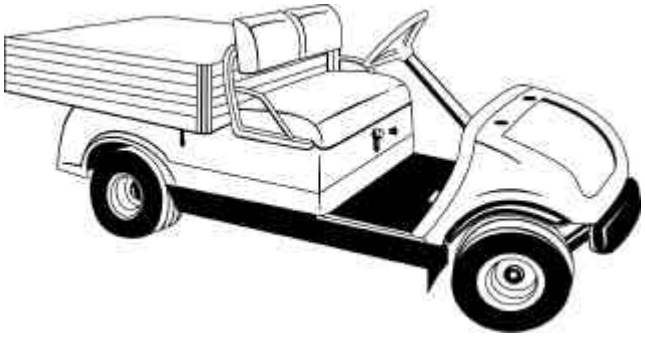

PARTS CATALOG

2001 G21AW
2002 G21AX

(JR61) U.S.A., CANADA, EUROPE, OTHERS

APRIL 2001

12JR6-100E1

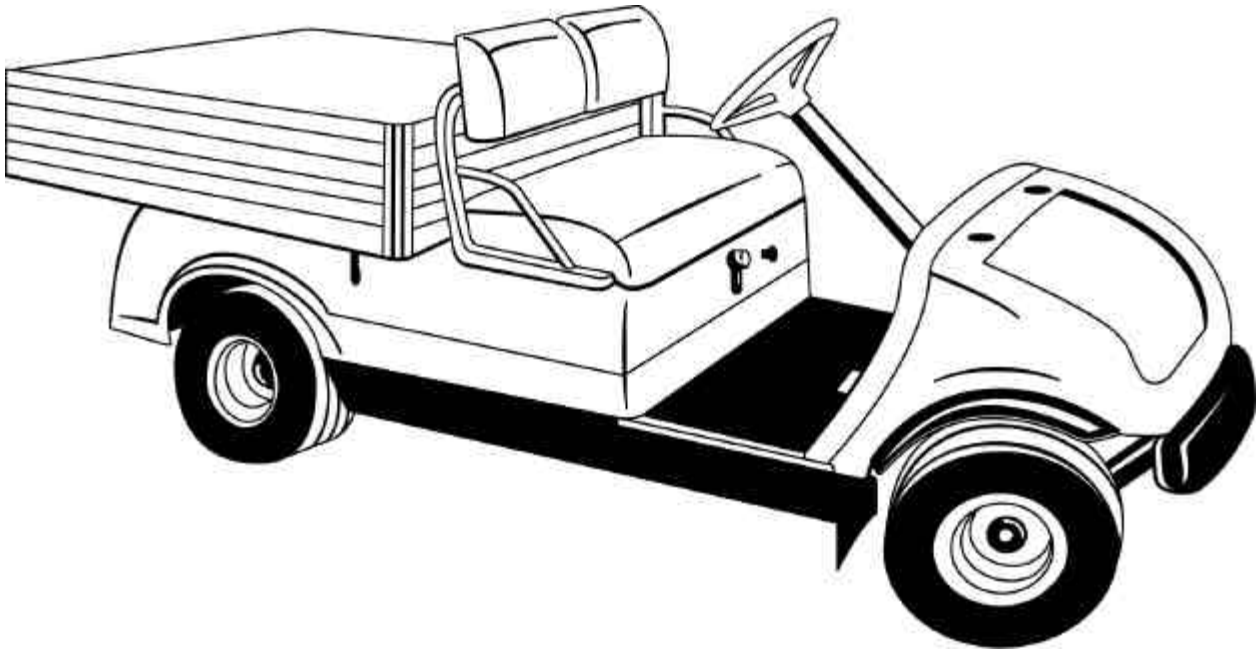

FOREWARD

This Parts Catalogue is related to the parts for the model(s) shown in the frame below. When you are ordering replacement parts, please refer to this Parts Catalogue and quote both part numbers and part names correctly.

G21A (JR61)

1. Modifications or additions which have been made after issue of the Parts Catalogue will be announced in the Yamaha Parts News. it is advisable that you make necessary corrections to the Parts Catalogue according to the Yamaha Parts News.

2. Abbreviations
The following abbreviations are used in this Parts Catalogue.

"UR"	Use specified part number.
"UN"	Use as many as needed.
"AP"	Alternate parts.
"LM"	Local Made (Parts need to be ordered locally)
"F#"	Frame Number (Applicable machine number)

3. Parts, which are to be supplied in an assembly, are listed with a dot (.) in front of the part name as shown below.
EXAMPLE
CARBURETOR ASSY
.JET, PILOT
.NOZZLE, MAIN

4. Number of component for assembly
The numeral appearing to the right of each component part indicates the quantity of parts for each assembly unit.

EXAMPLE

PART NO.	DESCRIPTION	Q'TY	REMARKS
2F5-83310-60	FRONT FLASHER LIGHT ASSY	2	
115-83311-60	.BULB (6V-18W)	1	

5. Applicable colors of graphics are represented in the "REMARKS" as shown below.

PART NO.	DESCRIPTION	Q'TY	REMARKS
2N4-24110-00-X5	FUEL TANK COMP.	1	MAXIM RED
3J1-24240-10	.GRAPHIC, FUEL TANK	1	for MXR

6. Applicable Serial No. and Color Code

① Frame Serial No.	JR6-000101 ~
② Engine Serial No.	JR6-000101 ~

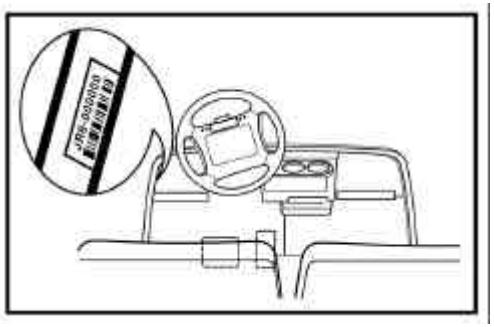

7. Note that the illustrations are for reference in finding parts numbers, not to be used for assembling. When assembling, please use the applicable service manual.

8. The asterisk (*) before a reference number indicates modification items after the first edition.

CONTENTS

ENGINE	PAGE
Engine Assembly	5
Cylinder Head	6
Crankshaft / Piston	7
Camshaft / Valve	8
Air Shroud / Fan	9
Intake	10
Carburetor	11
Exhaust	12
Crankcase	13

CHASSIS	
Engine Mount	14
Rear Arm / Suspension	15
Frame	16
Front Suspension / Wheel	17 ~ 18
Steering	19 ~ 20
Fuel Tank	21
Brake	22 ~ 24
Brake 2	25
Brake 3	26
Accelerator	27
Governor	28
Primary Clutch	29
Secondary Sheave	30

	PAGE
Transmission	31 ~ 33
Rear Axle Mount / Wheel	34
Shifter / Cables	35
Bumper	36
Body (Front)	37 ~ 38
Body 2 (Rear)	39
Body Fitting	40
Carrier	41 ~ 42
Seat	43
Starter Generator	44 ~ 45
Electrical 1	46
Electrical 2	47 ~ 48

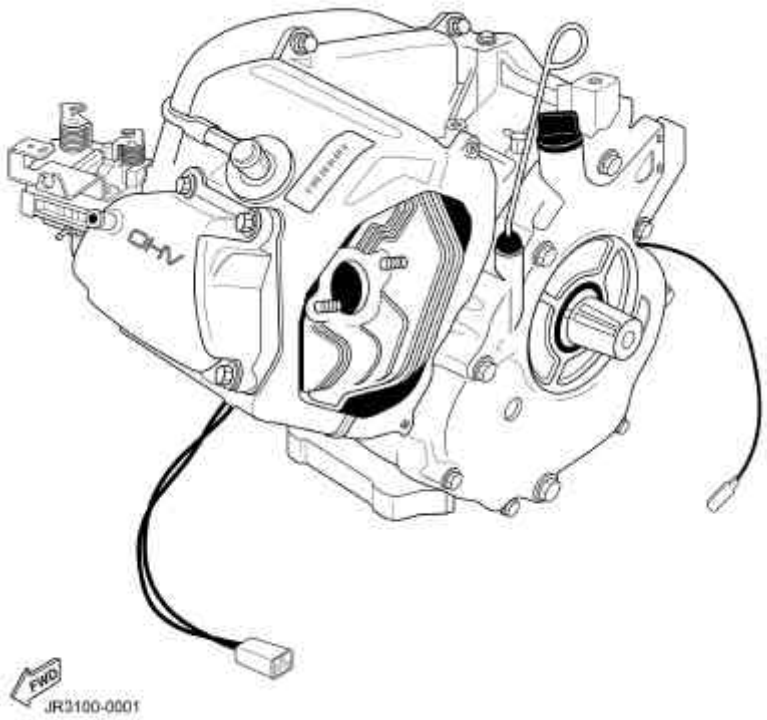

FIG. 1 ENGINE ASSEMBLY

REF NO.	PART NUMBER	DESCRIPTION	QTY	REMARKS
1	JR6-19001-00-00	ENGINE ASSEMBLY	1	

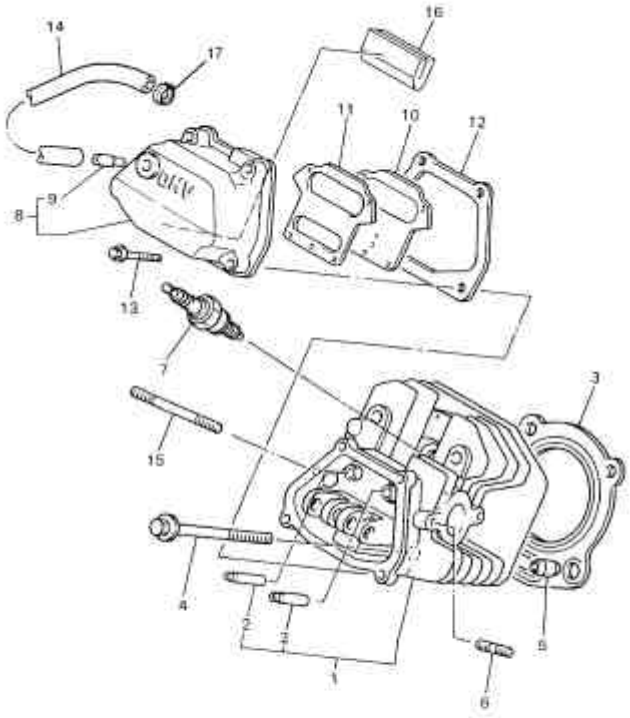

JTGr010-001B

FIG. 2 CYLINDER HEAD

REF NO.	PART NUMBER	DESCRIPTION	QTY	REMARKS
1	JR7-11111-01-00	HEAD, CYLINDER	1	
2	JN6-11133-10-00	.GUIDE, VALVE	2	
3	JR7-11181-00-00	GASKET, CYLINDER HEAD	1	
4	95817-10070-00	BOLT, FLANGE	4	
5	99530-14016-00	PIN, DOWEL A	2	
6	95617-08618-00	BOLT, STUD	2	
7	NGK-BPR2E-S0-00	PLUG, SPARK	1	STD, U.S.
	94702-00348	PLUG, SPARK	1	STD, EUROPE
	NGK-BPR4E-S0-00	PLUG, SPARK	1	AP, U.S.
	94702-00343	PLUG, SPARK	1	AP, EUROPE
8	JN6-11191-01-00	COVER, CYLINDER	1	
9	JN6-11116-00-00	.JOINT, BREATHER	1	
10	JN6-11168-00-00	COVER, BREATHER	1	
11	JN6-11169-00-00	GASKET, BREATHER	1	
12	JN6-11193-00-00	GASKET, HEAD COVER	1	
13	95817-06030-00	BOLT, FLANGE	4	
14	JN6-E1166-00-00	PIPE, BREATHER	1	
15	95617-08710-00	BOLT, STUD	2	
16	JR7-11163-00-00	ELEMENT	1	
17	90467-13847-00	CLAMP	2	

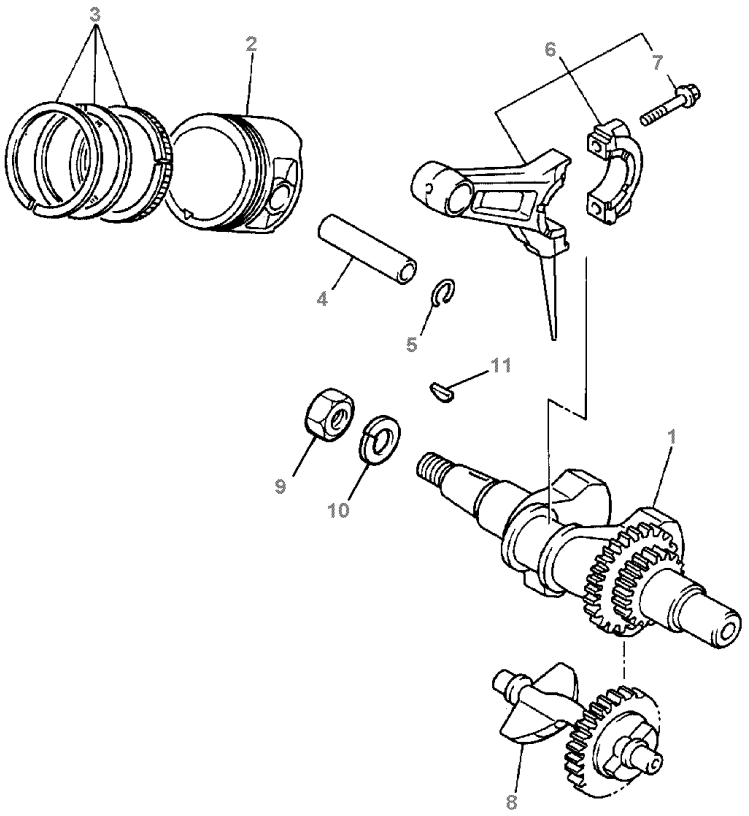

FIG. 3 CRANKSHAFT / PISTON

REF NO.	PART NUMBER	DESCRIPTION	QTY	REMARKS
1	JN6-11400-00-00	CRANK ASSY.	1	
2	JR7-11631-00-00	PISTON, (STD)	1	STD
	JR7-11635-00-00	PISTON, (0.25mm O/S)	1	AP
	JR7-11636-00-00	PISTON (0.50mm O/S)	1	AP
3	JR7-11610-00-00	PISTON RING SET, STD.	1	STD
	JR7-11610-10-00	PISTON RING SET, (0.25mm O/S)	1	AP
	JR7-11610-20-00	PISTON RING SET, (0.50mm O/S)	1	AP
4	447-11633-00-00	PIN, PISTON	1	
5	93450-21053-00	CIRCLIP	2	
6	JN6-11650-00-00	CONNECTING ROD ASSY	1	
7	JN6-11654-00-00	.BOLT, CONNECTING ROD	2	
8	JN6-11454-00-00	WEIGHT, 1	1	
9	95317-18600-00	NUT, HEX.	1	
10	90201-18620-00	WASHER, PLAIN	1	
11	90280-04052-00	KEY, WOODRUFF	1	

FIG. 4 CAMSHAFT / VALVE

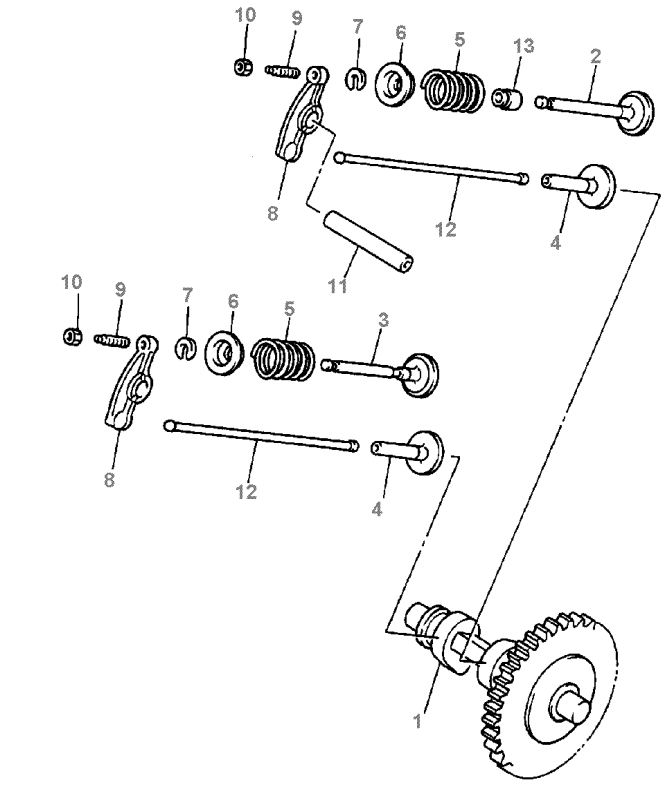

REF NO.	PART NUMBER	DESCRIPTION	QTY	REMARKS
1	JRH-12171-00-00	SHAFT, CAM 1	1	
2	JN6-12111-01-00	VALVE, INTAKE	1	
3	JRH-12121-00-00	VALVE, EXHAUST	1	
4	JN6-12153-00-00	LIFTER, VALVE	2	
5	90501-264A9-00	SPRING, COMPRESSION	2	
6	J38-12117-01-00	RETAINER, VALVE SPRING	2	
7	J38-12118-00-00	LOCK, VALVE SPRING	2	
8	JN6-12151-00-00	ARM, VALVE ROCKER	2	
9	22F-12159-00-00	SCREW, VALVE	2	
10	90170-05302-00	NUT, HEX.	2	
11	J38-12156-00-00	SHAFT, ROCKER	1	
12	JR7-12154-00-00	ROD, VALVE PUSH	2	
13	5H0-12119-00-00	SEAL, VALVE STEM	1	

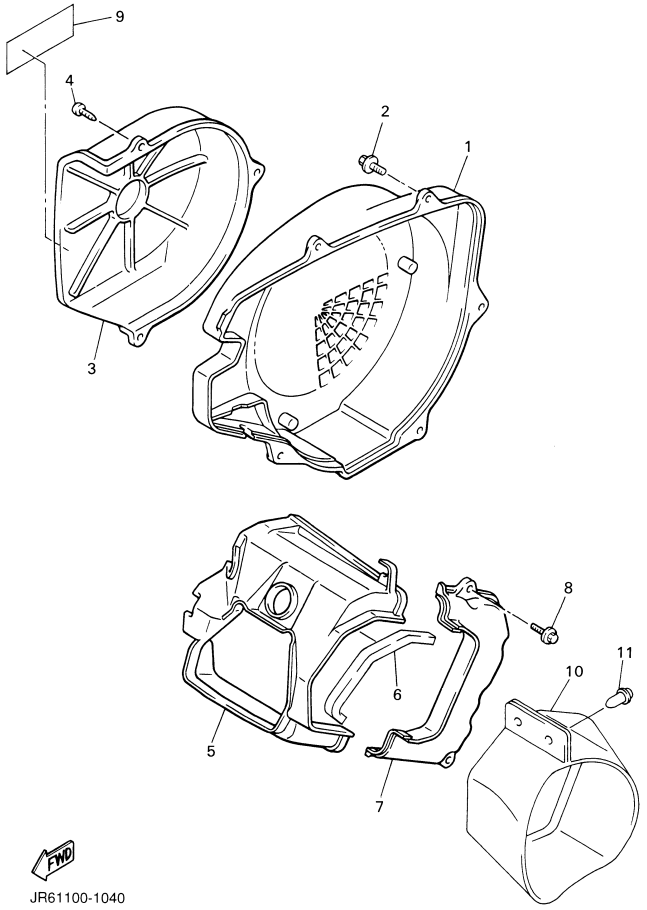

JR61100-1040

FIG. 5 AIR SHROUD / FAN

REF NO.	PART NUMBER	DESCRIPTION	QTY	REMARKS
1	JN6-12621-00-00	CASE, FAN 1	1	
2	95817-06020-00	BOLT, FLANGE	5	
3	JN6-12616-00-00	COVER, FAN CASE	1	
4	97707-60520-00	SCREW, PAN HEAD	3	
5	JN6-12651-00-00	AIR SHROUD, CYLINDER 1	1	
6	JR7-12658-00-00	DAMPER, AIR SHROUD 1	1	
7	JN6-12652-00-00	AIR SHROUD, CYLINDER 2	1	
8	95817-06020-00	BOLT, FLANGE	2	
9	JR3-2179V-03-00	PLATE, EPA / CALIF.	1	UR, U.S. MODEL
10	JN6-E2691-00-00	DUCT, 1	1	
11	90269-08813-00	RIVET	2	

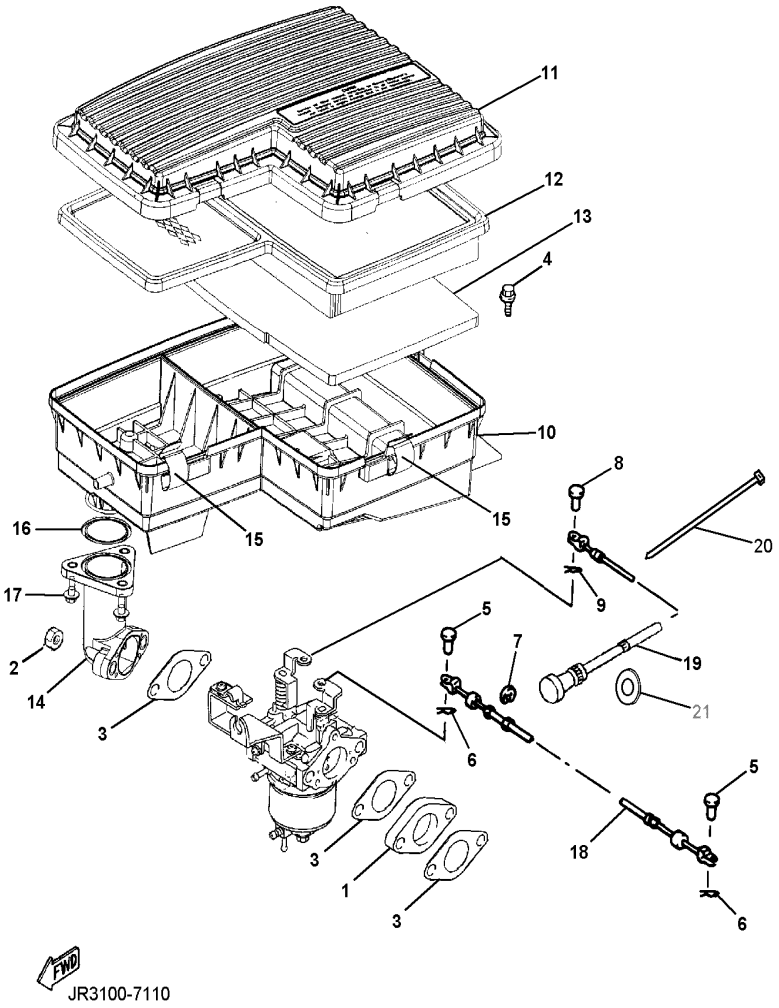

FIG. 6 INTAKE

REF NO.	PART NUMBER	DESCRIPTION	QTY	REMARKS
1	JN6-13595-00-00	JOINT	1	
2	90179-08491-00	NUT, FLANGE	2	
3	JN6-13567-00-00	GASKET	3	
4	90119-06819-00	BOLT, HEX HEAD W/WASHER	2	
5	91790-05010-00	PIN, CYL. HEAD	2	
6	90468-10050-00	CLIP	2	
7	99080-07600-00	CIRCLIP (E)	1	
8	91790-05010-00	PIN, CYL. HEAD	1	
9	90468-10050-00	CLIP	1	
10	JN6-E4411-02-00	CASE, AIR FILTER	1	
11	JN6-E4412-01-00	CAP, CASE 1	1	
12	JN6-E4450-01-00	ELEMENT ASSY.	1	
13	JN6-E445E-00-00	FILTER, 1	1	
14	JN6-E3586-01-00	JOINT, CARBURETOR	1	
15	JN6-E4424-00-00	CLIP, CAP FIT	5	
16	93210-398D6-00	O-RING	1	
17	90105-06862-00	BOLT, FLANGE	3	
18	JN6-F6312-01-00	WIRE, THROTTLE	1	
19	J55-F6331-01-00	WIRE, STARTER	1	
20	90464-31827-00	CLAMP	1	
21	90201-118N2-00	WASHER, PLAIN	1	

FIG. 7 CARBURETOR

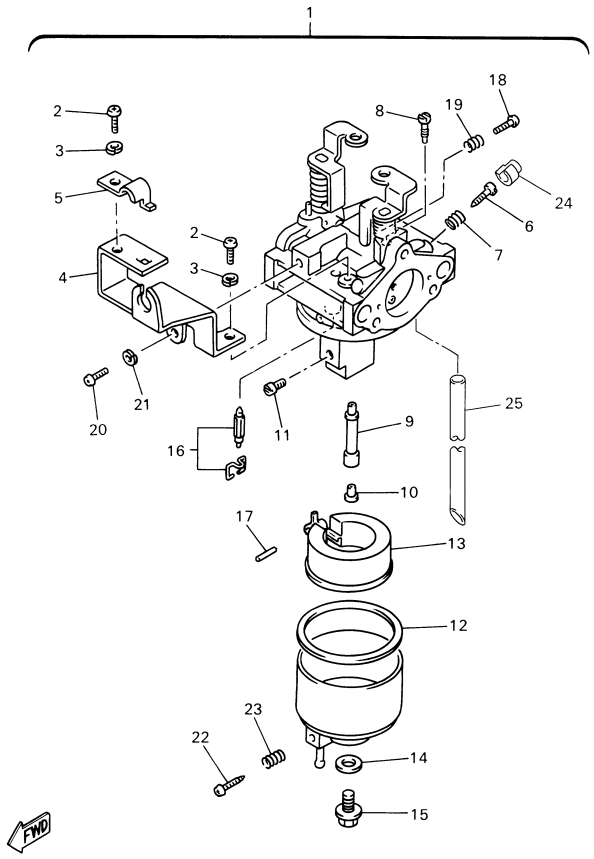

JR61100-1060

REF NO.	PART NUMBER	DESCRIPTION	QTY	REMARKS
1	JR6-14101-00-00	CARBURETOR ASSY.	1	
2	98507-05100-00	.SCREW, PAN HEAD	2	
3	92990-05100-00	.WASHER	2	
4	JN6-14291-00-00	.BRACKET 1	1	
5	J10-14227-00-00	.WASHER	1	
6	7LV-14211-00-00	.SCREW, PILOT ADJUSTING	1	
7	73A-14212-00-00	.SPRING, PILOT ADJUSTING	1	
8	620-1414J-24-00	.JET, PILOT	1	(#61.3)
9	JN6-1495H-3B-00	.NOZZLE, MAIN	1	
10	73A-1414G-00-00	.PIPE, MAIN BLEED	1	
11	3G2-1423E-33-00	.JET, MAIN	1	(#83.8)
12	796-14184-00-00	.GASKET, FLOAT CHAMBER	1	
13	JN6-14185-00-00	.FLOAT	1	
14	127-14198-00-00	.GASKET	1	
15	7R1-14162-00-00	.BOLT, HOLDING	1	
16	JN5-14150-00-00	.NEEDLE ASSY	1	
17	22F-14186-00-00	.PIN, FLOAT	1	
18	1WG-14922-00-00	.SCREW, THROTTLE	1	
19	73A-14212-10-00	.SPRING	1	
20	98507-04010-00	.SCREW, PAN HEAD	1	
21	92990-05100-00	.WASHER	1	
22	7E1-14191-00-00	.PLUG, DRAIN	1	
23	73A-14212-00-00	.SPRING	1	
24	7LV-14118-00-00	.CAP	1	
25	1K7-14197-01-00	.VENT HOSE	1	

FIG. 8 EXHAUST

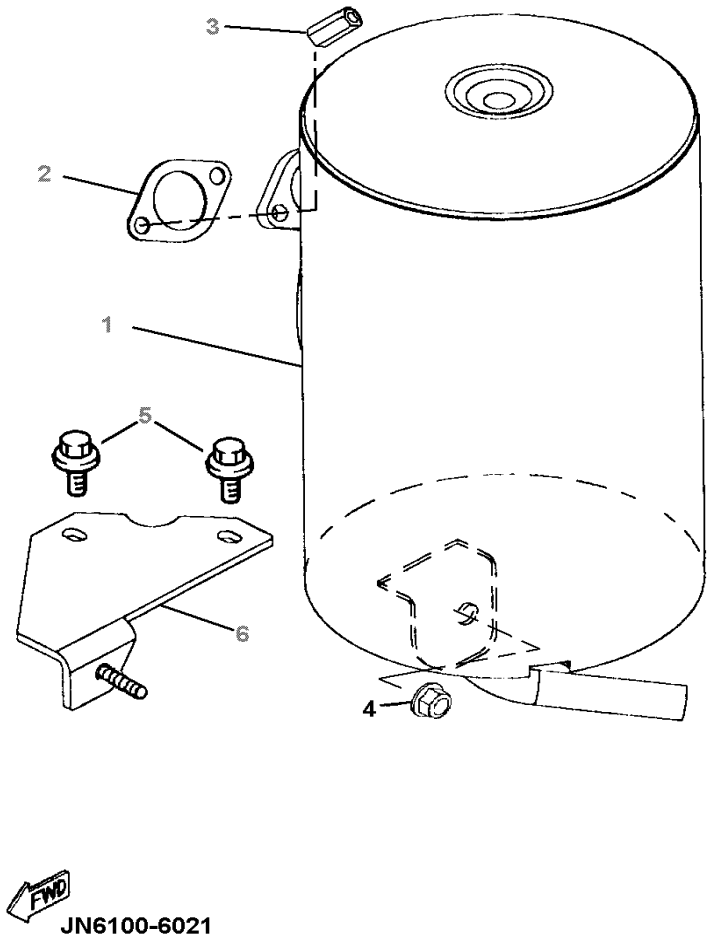

REF NO.	PART NUMBER	DESCRIPTION	QTY	REMARKS
1	JN6-E4710-00-00	MUFFLER ASSEMBLY	1	
2	7KY-14613-01-00	GASKET, EXHAUST 1	1	
3	90179-08879-00	NUT	2	
4	90185-08841-00	NUT, U-FLANGE	1	
5	90119-08825-00	BOLT, HEX HEAD W/WASHER	2	
6	JN6-F1435-10-00	BRACKET, MUFFLER	1	

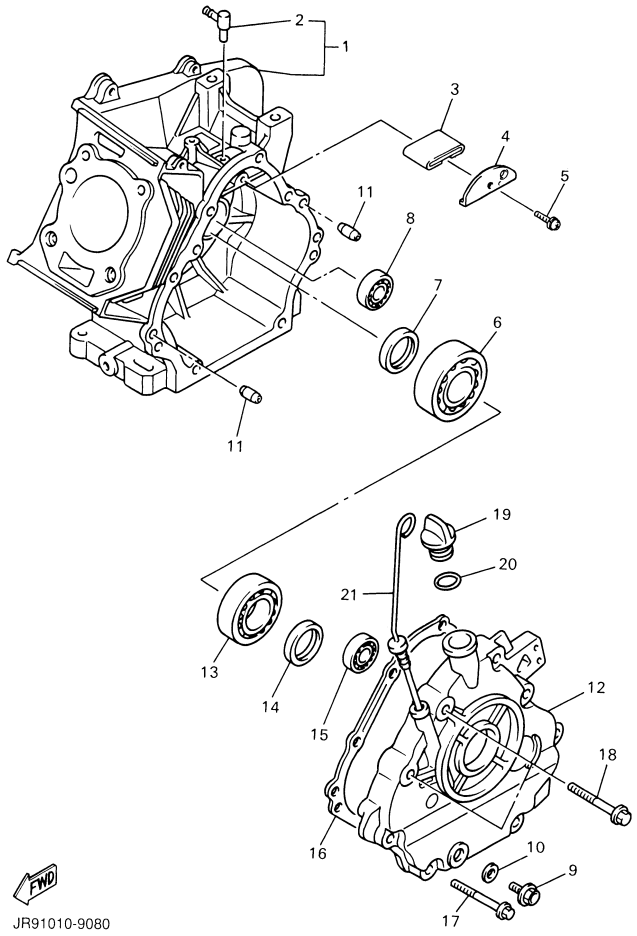

FIG. 9 CRANKCASE

REF NO.	PART NUMBER	DESCRIPTION	QTY	REMARKS
1	JR7-15110-00-00	CRANKCASE ASSY	1	
2	JN6-15155-00-00	.NOZZLE, 3	1	
3	JR7-15407-00-00	ELEMENT 1	1	
4	JR7-15123-00-00	PLATE, BAFFLE	1	
5	90159-06107-00	SCREW, W/WASHER	1	
6	93306-30709-00	BEARING	1	
7	93102-35191-00	SEAL, OIL	1	
8	93306-20211-00	BEARING	1	
9	90340-12097-00	PLUG, STRAIGHT SCREW	1	
10	812-11198-00-00	GASKET	1	
11	91808-16023-00	PIN, DOWEL A	2	
12	JN6-15411-00-00	COVER, CRANKCASE	1	
13	93306-20716-00	BEARING	1	
14	93102-35191-00	SEAL, OIL	1	
15	93306-20211-00	BEARING	1	
16	JN6-15451-02-00	GASKET, CRANKCASE	1	
17	95817-08045-00	BOLT, FLANGE	6	
18	95817-10050-00	BOLT, FLANGE	2	
19	796-15363-01-00	PLUG, OIL	1	
20	93210-22344-00	O-RING	1	
21	J38-15361-00-00	GAUGE, LEVEL	1	

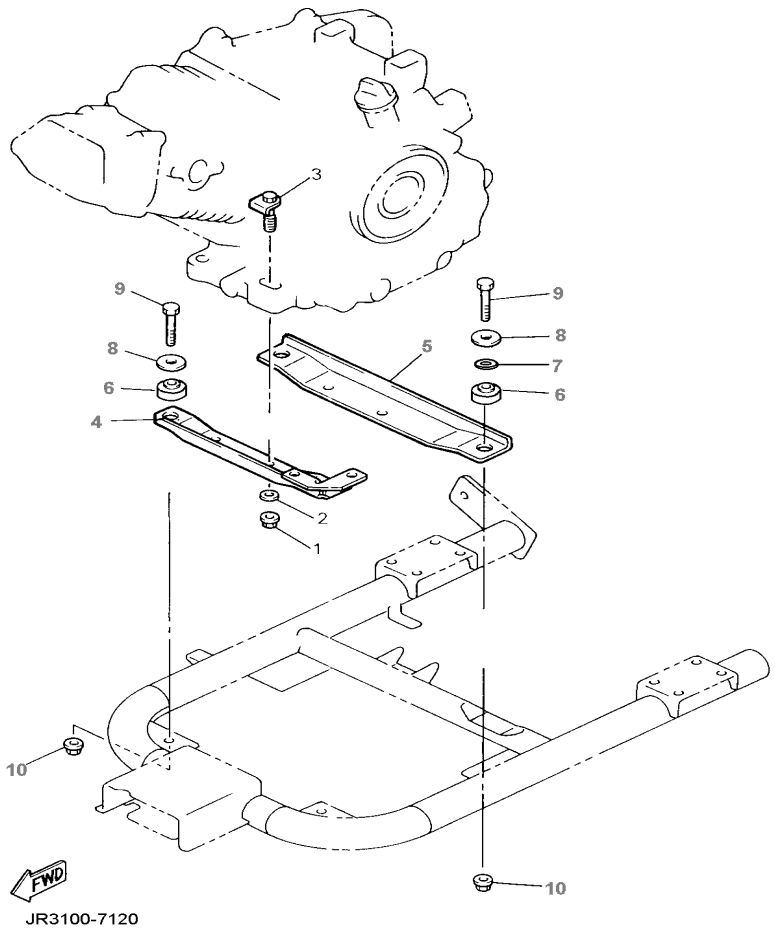

FIG. 10 ENGINE MOUNT

REF NO.	PART NUMBER	DESCRIPTION	QTY	REMARKS
1	95607-10200-00	NUT, U-FLANGE	4	
2	92907-10200-00	WASHER, PLAIN	4	
3	JN6-F1481-00-00	BOLT, ENGINE	4	
4	JN6-F1411-00-00	BRACKET, ENGINE 1	1	
5	JN6-F1419-02-00	BRACKET, ENGINE 2	1	
6	JR3-F1459-00-00	SPACER	4	
7	92990-82000-00	WASHER, PLAIN	2	
8	90201-088K6-00	WASHER, PLAIN	4	
9	90101-08880-00	BOLT, HEX	4	
10	90179-08885-00	NUT, U-FLANGE	4	

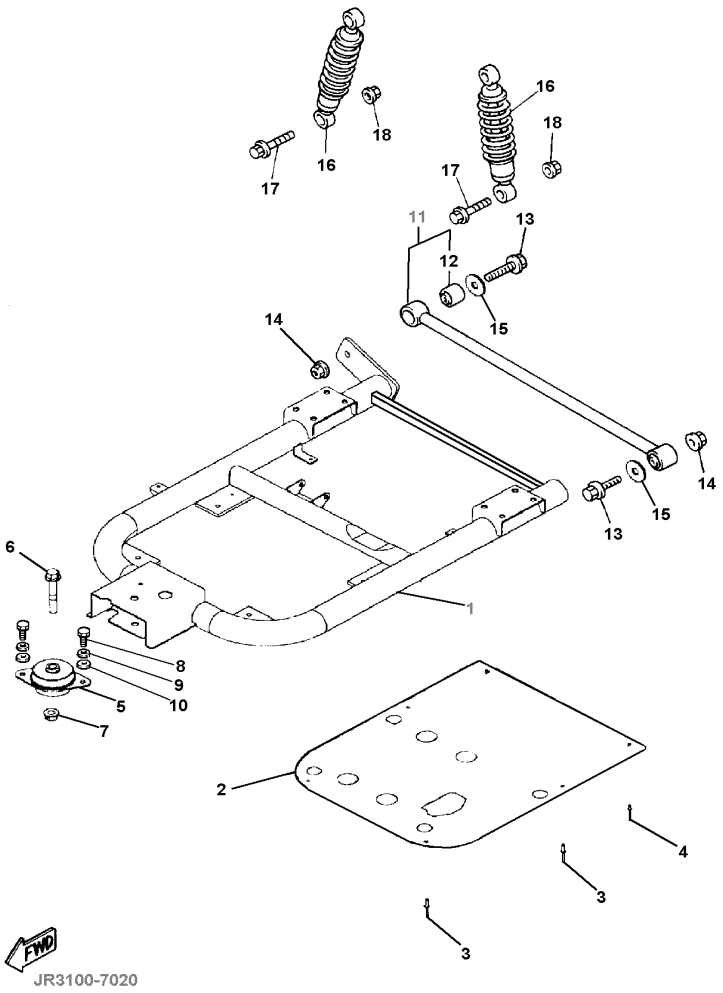

FIG. 11 REAR ARM / SUSPENSION

REF NO.	PART NUMBER	DESCRIPTION	QTY	REMARKS
1	JN6-F2110-01-00	REAR ARM COMP.	1	
2	JN6-F2128-01-00	COVER, 1	1	
3	90267-48850-00	RIVET, BLIND	4	
4	90267-40851-00	RIVET, BLIND	2	
5	JN6-F2123-01-00	BUSHING, 1	1	
6	90105-13864-00	BOLT, FLANGE	1	
7	90179-13878-00	NUT	1	
8	97017-10020-00	BOLT, HEX. HEAD	2	
9	92907-10100-00	WASHER, LOCK	2	
10	92907-10600-00	WASHER, PLAIN	2	
11	JN6-F217G-00-00	ROD, CONNECTING ASSY.	1	
12	JN6-F2124-00-00	.BUSHING, 2	2	
13	95817-10055-00	BOLT, FLANGE	2	
14	95617-12200-00	NUT, U-FLANGE	2	
15	90201-12426-00	WASHER, PLAIN	2	
16	JR6-F2210-00-00	SHOCK ABSORBER	2	
17	95807-10055-00	BOLT, FLANGE	4	
18	95607-10200-00	NUT, U-FLANGE	4	

FIG. 12 FRAME

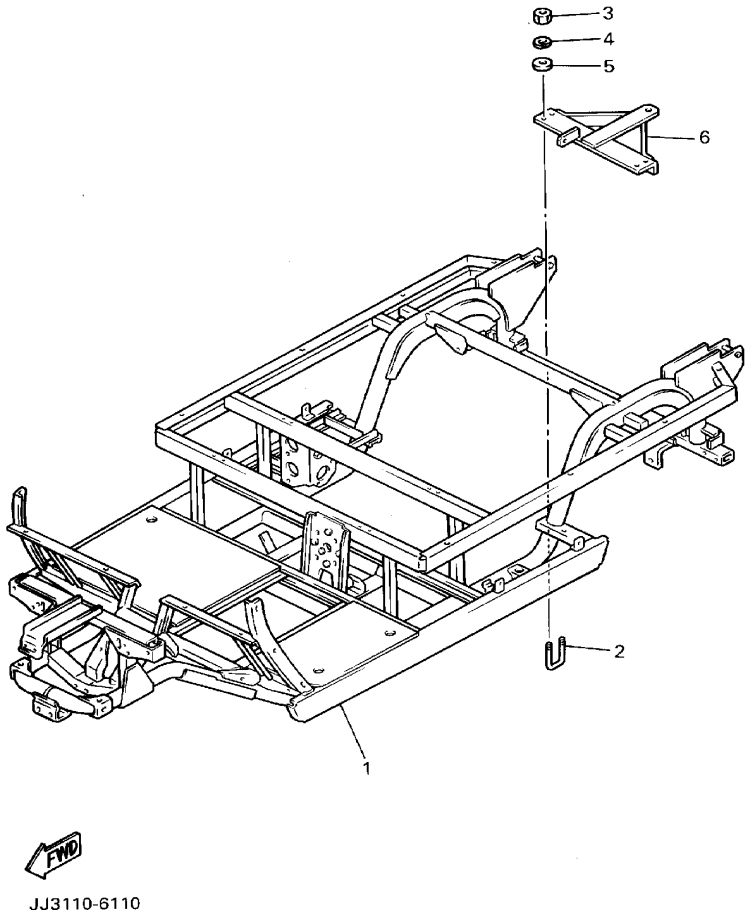

JJ3110-6110

REF NO.	PART NUMBER	DESCRIPTION	QTY	REMARKS
1	JR6-F2501-00-00	FRAME COMP.	1	
2	90109-10862-00	BOLT	2	
3	90170-10847-00	NUT, HEX	4	
4	92907-10100-00	WASHER, SPRING	4	
5	92907-10200-00	WASHER, PLAIN	4	
6	JJ3-F722B-02-00	BAR, TOW	1	

FIG. 13 FRONT SUSPENSION / WHEEL

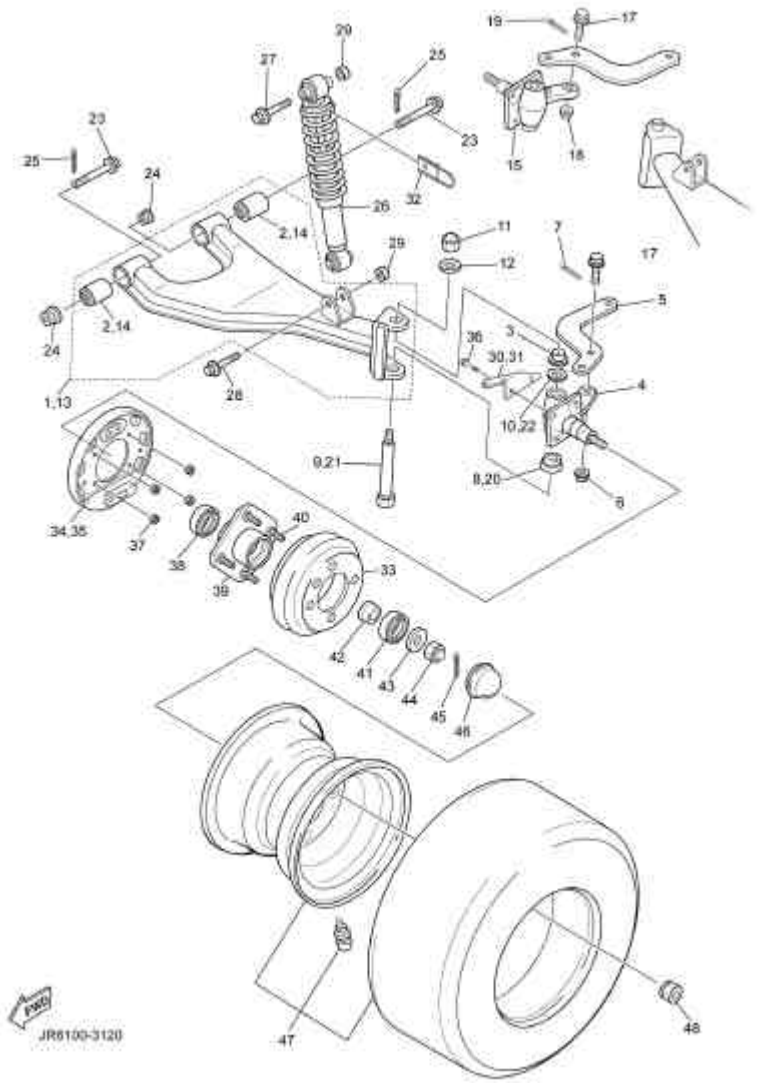

REF NO.	PART NUMBER	DESCRIPTION	QTY	REMARKS
1	JR6-F3570-00-00	FRONT LOWER ARM, LEFT	1	
2	JN6-F3526-00-00	.BUSHING, ARM	2	
3	90384-15825-00	BUSH, BIMETAL	2	
4	JR6-F3501-00-00	KNUCKLE, STEERING LEFT	1	
5	JN3-F3512-00-00	ARM, KNUCKLE	1	
6	95607-10200-00	NUT, U-FLANGE	2	
7	91490-25020-00	PIN, SPLIT	2	
8	J38-23527-00-00	SEAL, DUST 1	1	
9	JJ3-F3516-00-00	PIN, STEERING KNUCKLE	1	
10	90201-156J2-00	WASHER, PLAIN	1	
11	95607-12200-00	NUT, U-FLANGE	2	
12	92907-12300-00	WASHER	2	
13	JR6-F3580-00-00	FRONT LOWER ARM, RIGHT	1	
14	JN6-F3526-00-00	.BUSHING, ARM	2	
15	JR6-F3502-00-00	KNUCKLE, STEERING RIGHT	1	
16	JN3-F3512-00-00	ARM, KNUCKLE	1	
17	90105-10549-00	BOLT, FLANGE	4	
18	95607-10200-00	NUT, U-FLANGE	2	
19	91490-25020-00	PIN, SPLIT	2	
20	J38-23527-00-00	SEAL, DUST 1	1	
21	JJ3-F3516-00-00	PIN, STEERING KNUCKLE	1	
22	90201-156J2-00	WASHER, PLAIN	1	
23	95817-10075-00	BOLT, FLANGE	4	
24	95607-10200-00	NUT, SELF-LOCKING	4	
25	91401-25020-00	PIN, SPLIT	4	
26	JR6-F3350-00-00	SHOCK ABSORBER ASSY	2	
27	95817-10065-00	BOLT	2	

FIG. 13 FRONT SUSPENSION / WHEEL

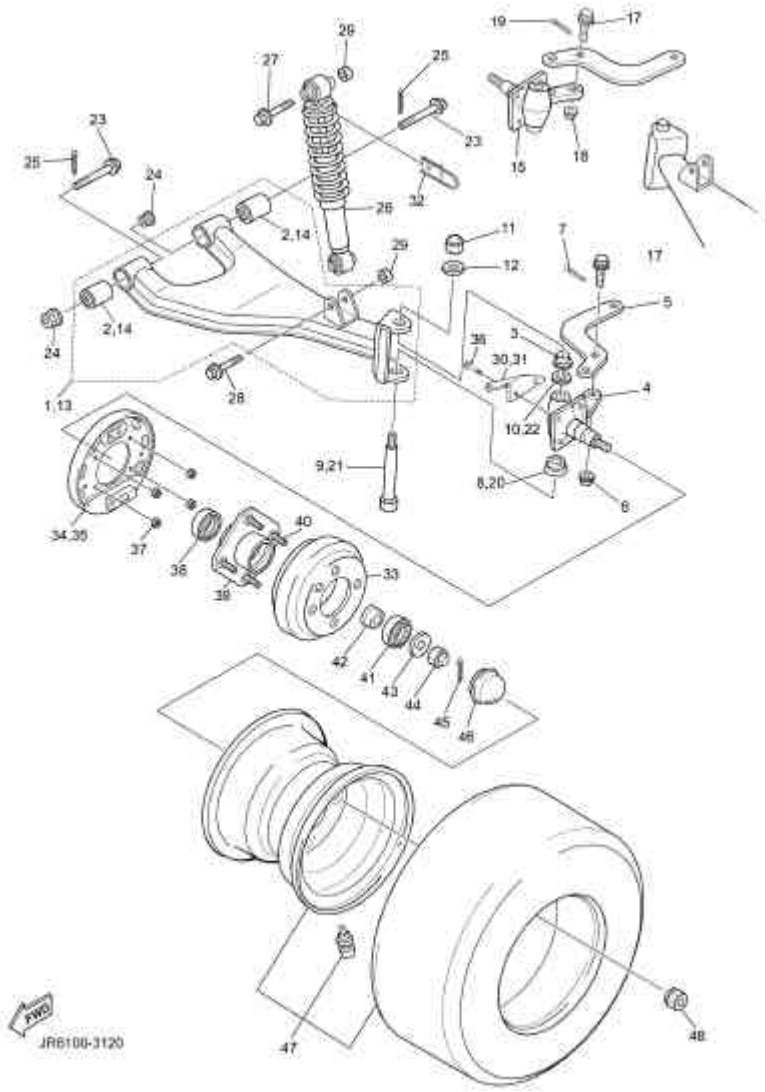

REF NO.	PART NUMBER	DESCRIPTION	QTY	REMARKS
28	95817-10050-00	BOLT	2	
29	95607-10200-00	NUT, U	4	
30	JR6-F7263-00-00	BRKT. 1 (LH)	1	
31	JR6-F7264-00-00	BRKT. 2 (RH)	1	
32	JR6-F1339-00-00	GUIDE WIRE	2	
33	J55-G6521-10-00	DRUM	2	
34	JN6-F7290-02-00	BACKING PLT. ASSY (LH)	1	SEE PG. 26 FOR CHILD PARTS
35	JN6-F7280-02-00	BACKING PLT. ASSY (RH)	1	SEE PG. 25 FOR CHILD PARTS
36	9502P-08025-00	BOLT	8	
37	90114-12803-00	NUT	8	
38	99306-005Y3-00	BEARING	2	
39	JR6-F5110-00-00	HUB	2	
40	90114-12803-00	BOLT, KNURLED	8	
41	93306-204X0-00	BEARING	2	
42	90387-241M7-00	COLLAR	2	
43	90209-32271-00	WASHER	2	
44	95617-14100-00	NUT, U	2	
45	91490-25020-00	PIN, SPLIT	2	
46	JN6-F5118-00-00	COVER, HUB DUST	2	
47	JN6-F5100-11-00	FR. WHEEL ASSY.	2	
48	90179-12262-00	NUT	8	

FIG. 14 STEERING

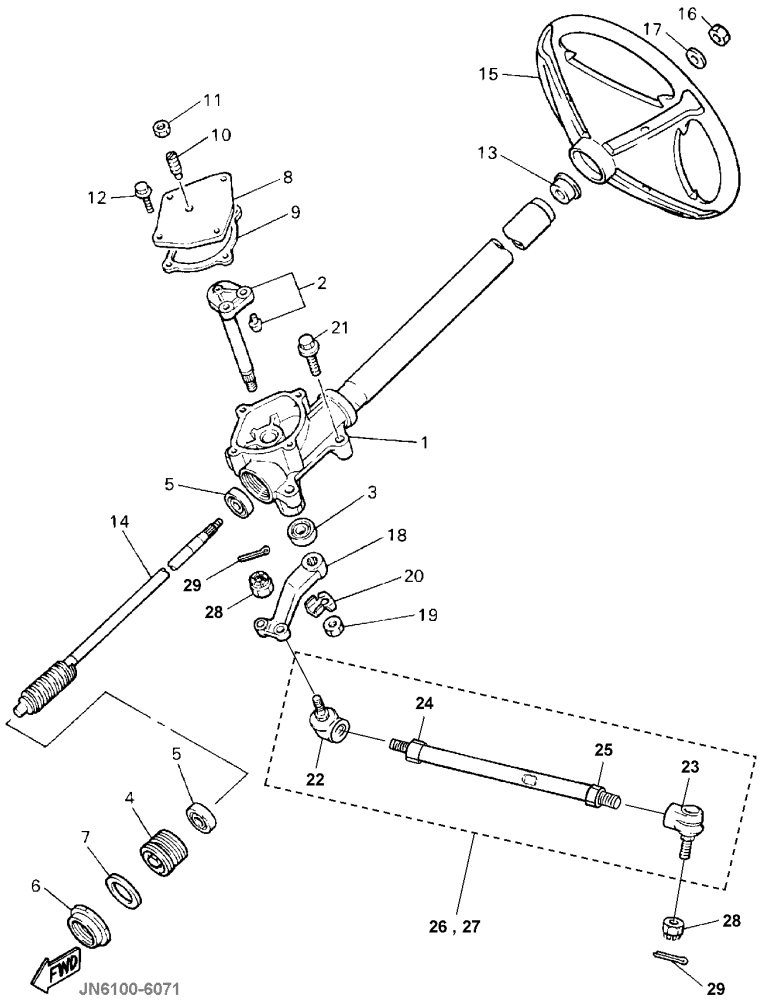

REF NO.	PART NUMBER	DESCRIPTION	QTY	REMARKS
1	JG5-F3811-00-00	COLUMN, STEERING	1	
2	J38-23816-00-00	ARM, PITMAN	1	
3	93102-22314-00	SEAL, OIL	1	
4	J55-F3876-00-00	BOLT	1	
5	93332-000Y2-00	BEARING	2	
6	J10-23877-00-00	NUT	1	
7	J10-23444-00-00	WASHER	1	
8	JN3-F3818-00-00	COVER, STEERING	1	
9	J38-23462-01-00	SEAL, STEERING	1	
10	J10-23459-00-00	BOLT	1	
11	90170-08024-00	NUT, HEX.	1	
12	95817-06020-00	BOLT, FLANGE	4	
13	JN3-F3814-00-00	HOLDER, HANDLE	1	
14	J10-23840-00-00	STEERING SHAFT	1	
15	JN3-F3838-00-00	WHEEL, STEERING	1	
16	95617-12100-00	NUT, SELF-LOCKING	1	
17	92907-12200-00	WASHER, PLAIN	1	
18	J38-23826-01-00	ARM, IDLER	1	
19	95707-16300-00	NUT, NYLON	1	
20	90215-16252-00	WASHER, TONGUE	1	
21	95817-10050-00	BOLT, FLANGE	4	
22	JN6-F3845-00-00	UNIVERSAL JOINT	2	
23	JN6-F3841-00-00	UNIVERSAL JOINT	2	
24	9530N-10600-00	NUT, (RH THREAD)	2	
25	90170-10414-00	NUT, (LH THREAD)	2	
26	JN6-F3850-11-00	TIE ROD ASSY, RIGHT	1	
27	JN6-F3830-11-00	TIE ROD ASSY, LEFT	1	

FIG. 14 STEERING

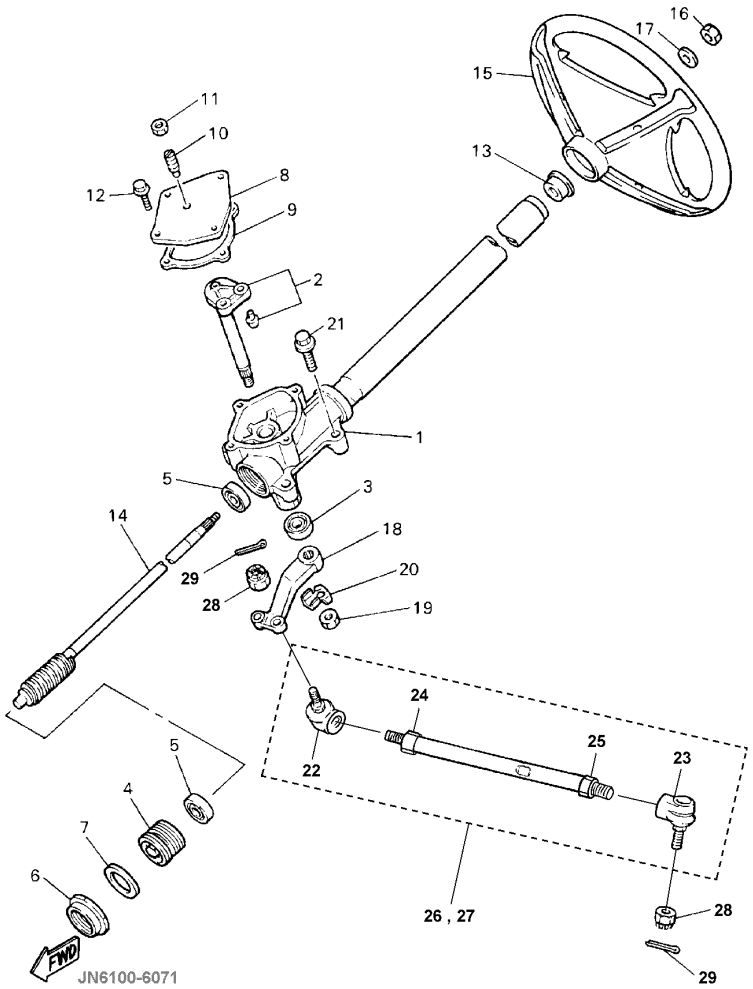

REF NO.	PART NUMBER	DESCRIPTION	QTY	REMARKS
28	95617-10200-00	NUT, U-FLANGE	4	
29	91401-25020-00	PIN, SPLIT	4	

FIG. 15 FUEL TANK

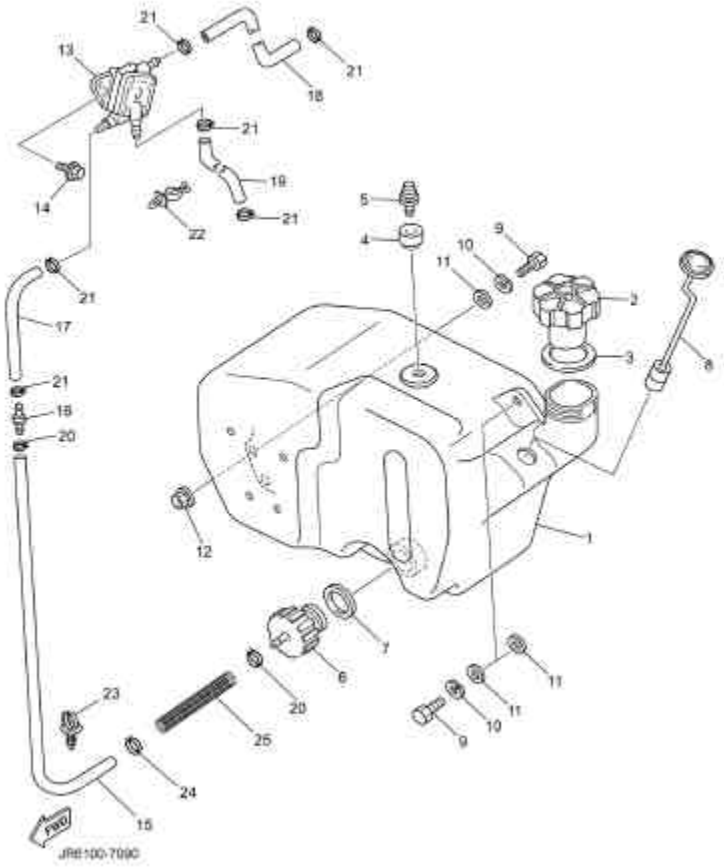

REF NO.	PART NUMBER	DESCRIPTION	QTY	REMARKS
1	J55-F4111-11-00	TANK, FUEL	1	
2	J24-24620-01-00	BODY CAP ASSY	1	
3	J10-24612-00-00	GASKET, CAP	1	
4	J10-21773-00-00	GROMMET	1	
5	J24-24460-01-00	RELEASE VALVE ASSY.	1	
6	8R4-24560-00-00	FILTER ASSY.	1	
7	8F3-24564-00-00	GASKET	1	
8	J38-85710-02-00	FUEL LEVEL GAUGE ASSY.	1	
9	97007-08025-00	BOLT	3	
10	92907-08100-00	WASHER, SPRING	3	
11	90201-086A3-00	WASHER, PLATE	4	
12	90185-08169-00	NUT, SELF-LOCKING	2	
13	JN6-F4410-00-00	FUEL PUMP ASSY.	1	
14	95817-06016-00	BOLT, FLANGE	2	
15	JR3-F4312-00-00	PIPE 2	1	
16	JR3-F4461-00-00	PIPE, JOINT	1	
17	JN6-F4311-00-00	PIPE, FUEL	1	
18	JN6-F4313-00-00	PIPE 3	1	
19	JR3-F4314-00-00	PIPE 4	1	
20	90467-12845-00	CLIP	2	
21	90467-10846-00	CLIP	6	
22	90464-11816-00	CLAMP	1	
23	90464-12830-00	CLAMP	1	
24	90501-08707-00	SPRING, COMPRESSION	1	
25	90467-10846-00	CLIP	1	

FIG. 16 BRAKE

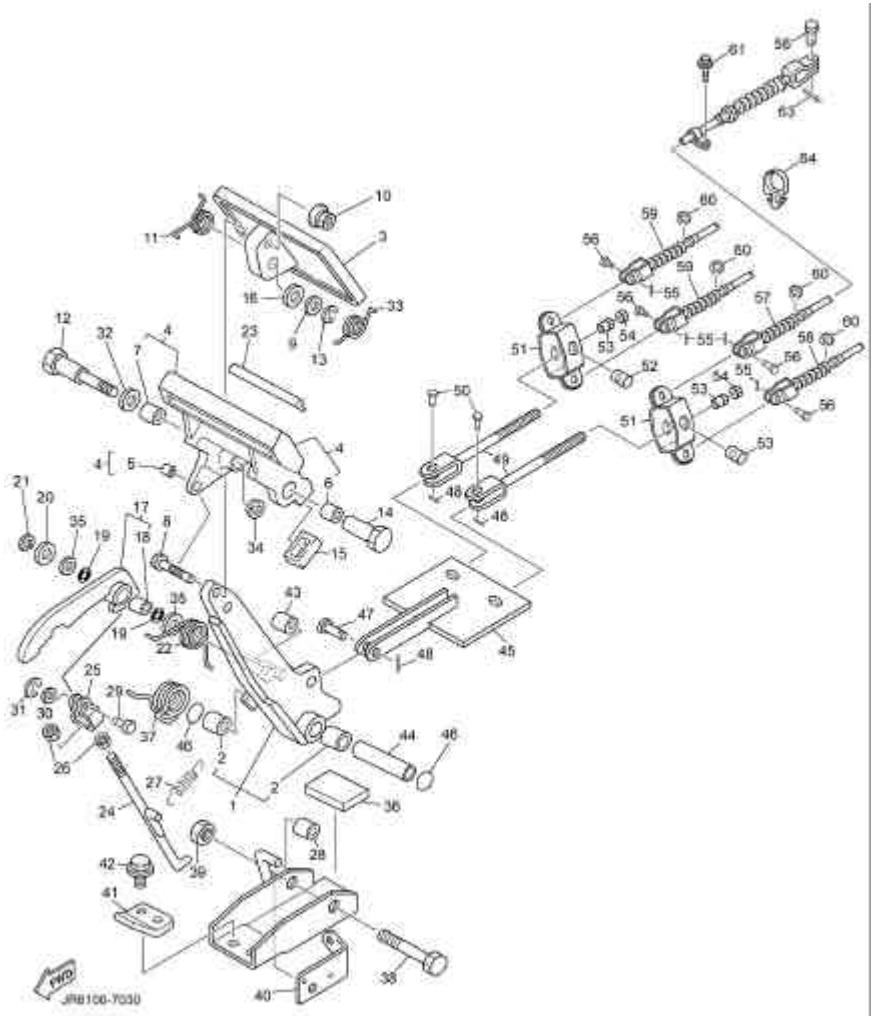

REF NO.	PART NUMBER	DESCRIPTION	QTY	REMARKS
1	J46-27250-03-00	BRAKE ARM COMP	1	
2	90384-14080-00	.BUSH, BIMETAL FORMED	2	
3	J10-27211-00-00	PEDAL, BRAKE	1	
4	J17-25670-01-00	PARKING PEDAL COMP.	1	
5	90384-05163-00	.BUSH, BIMETAL	1	
6	90384-12164-00	.BUSH, BIMETAL	1	
7	90380-12051-00	.BUSH, SOLID	1	
8	90101-06555-00	BOLT, HEX.	1	
9	J55-27226-00-00	WASHER, LINK	1	
10	90179-06387-00	NUT	1	
11	90508-23542-00	SPRING,TORSION	1	
12	90109-08669-00	BOLT	1	
13	92907-08100-00	WASHER, SPRING	1	
14	90179-08378-00	NUT	1	
15	J17-25679-01-00	DAMPER	2	
16	92907-08200-00	WASHER, PLAIN	1	
17	J17-W2561-02-00	SECTOR, PARKING BRAKE	1	
18	90384-10162-00	.BUSH, BIMETAL	1	
19	J17-27221-00-00	SEAL, SHAFT	2	
20	92907-10600-00	WASHER, PLAIN	1	
21	99080-07600-00	CIRCLIP (E)	1	
22	90508-14548-00	SPRING, TORSION	1	
23	J17-25672-01-00	PAD, PARKING	1	
24	J17-27231-03-00	ROD, BRAKE	1	
25	J17-27232-00-00	END, ROD 1	1	
26	95317-06700-00	NUT, HEX.	2	
27	90506-08526-00	SPRING,TENSION	1	

FIG. 16 BRAKE

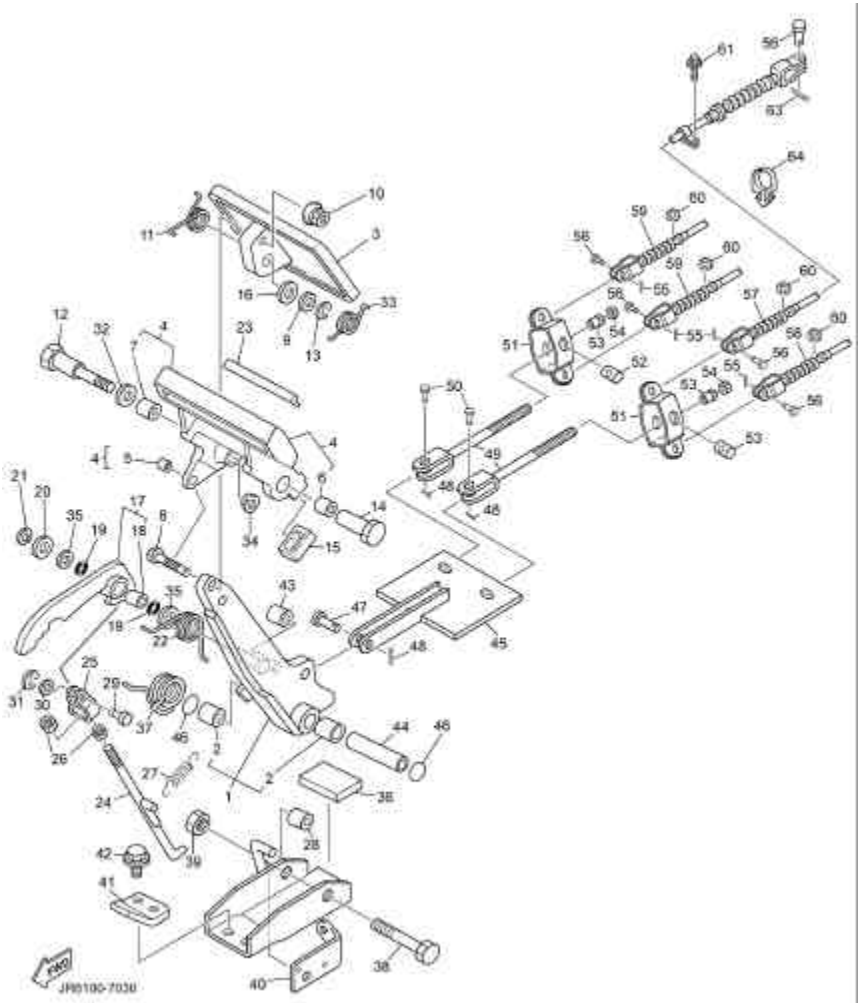

REF NO.	PART NUMBER	DESCRIPTION	QTY	REMARKS
28	J17-25673-00-00	DAMPER, BRAKE	1	
29	J17-27228-00-00	PIN, LINK JOINT	1	
30	92907-05600-00	WASHER, PLAIN	1	
31	99080-04600-00	CIRCLIP (E)	1	
32	90201-123F2-00	WASHER, PLAIN	1	
33	90508-26557-00	SPRING, TORSION	1	
34	90380-12105-00	BUSH, SOLID	1	
35	90201-104G8-00	WASHER, PLAIN	2	
36	JN3-F7245-00-00	PAD, BRAKE PEDAL	1	
37	90508-405A9-00	SPRING,TORSION	1	
38	90101-10447-00	BOLT, HEX.	1	
39	95617-10200-00	NUT, U-FLANGE	1	
40	J55-2252M-00-00	BRACKET, 3	1	
41	J17-27246-00-00	NAIL, BRAKE	1	
42	95807-08020-00	BOLT, FLANGE	2	
43	J17-25673-00-00	DAMPER, BRAKE	1	
44	90387-107F8-00	COLLAR	1	
45	JR6-F7215-00-00	LINK	1	
46	93210-14579-00	0-RING	2	
47	91701-10026-00	PIN	1	
48	91490-30020-00	PIN, SPLIT	3	
49	JN6-F5685-00-00	ROD	2	
50	91701-10022-00	PIN	2	
51	J10-25681-00-00	EQUALIZER, BRAKE	2	
52	90249-14129-00	PIN	2	
53	90179-08894-00	COLLAR	2	
54	95307-08700-00	NUT, HEX	2	

FIG. 16 BRAKE

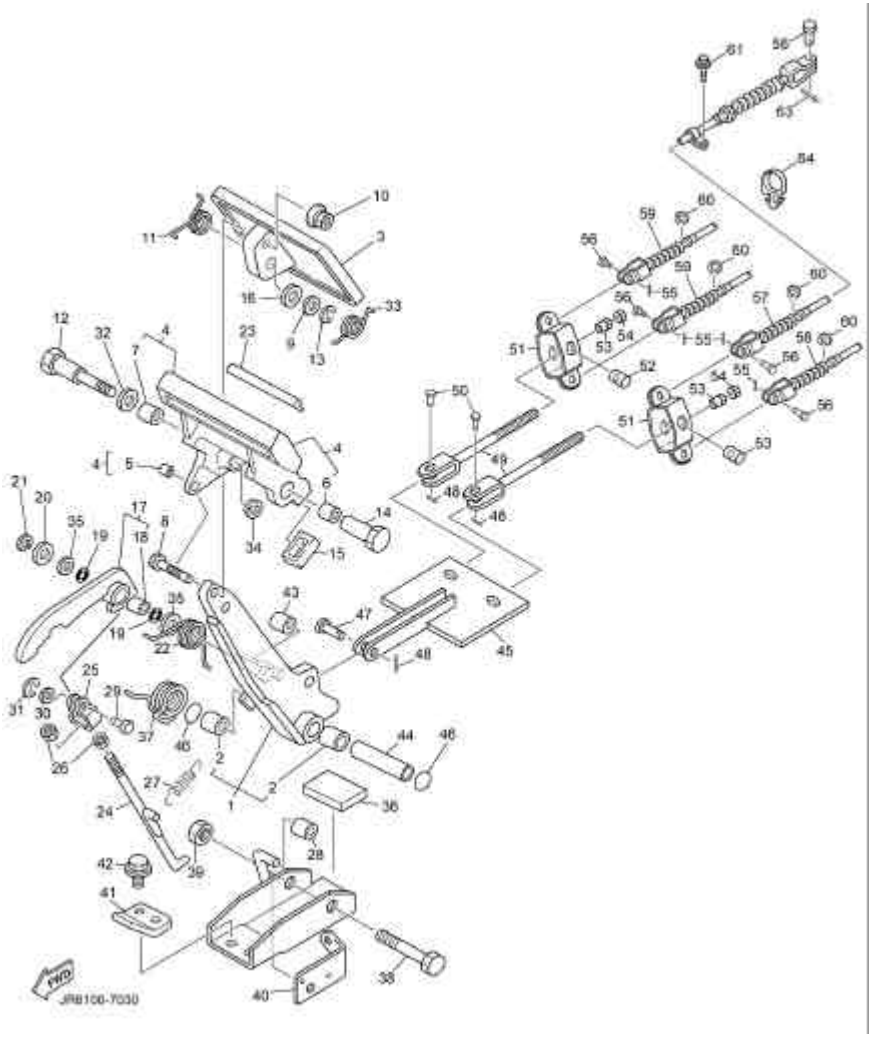

REF NO.	PART NUMBER	DESCRIPTION	QTY	REMARKS
55	91490-25020-00	PIN, SPLIT	4	
56	91701-08018-00	PIN	8	
57	JJ3-F6341-01-00	WIRE, BRAKE 1	1	
58	JJ3-F6351-02-00	WIRE, BRAKE 2	1	
59	JR6-F6361-00-00	WIRE, BRAKE 3	2	
60	99080-09600-00	CIRCLIP E	4	
61	95817-06016-00	BOLT, FLANGE	2	
62	91490-25020-00	PIN, SPLIT	4	
63	90464-19815-00	CLAMP	1	

FIG. 17 BRAKE 2

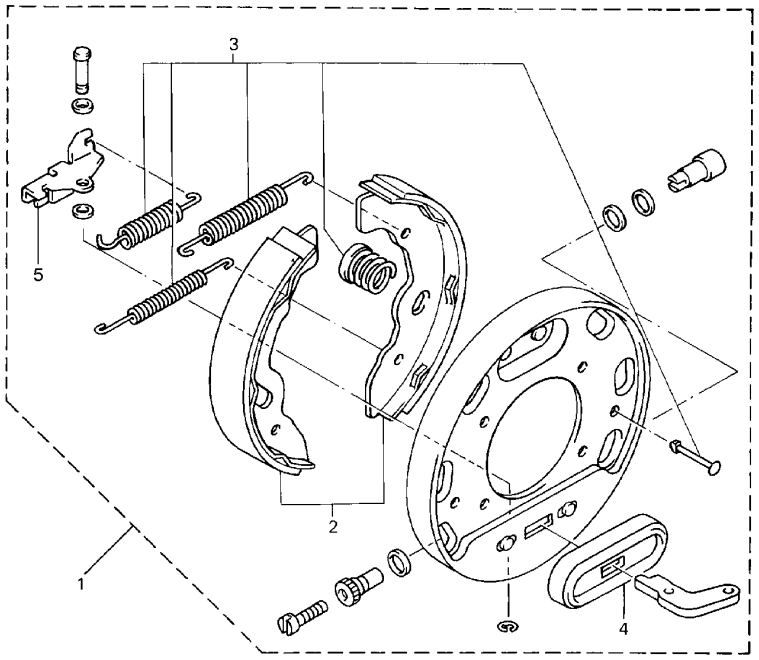

REF NO.	PART NUMBER	DESCRIPTION	QTY	REMARKS
1	JN6-F7280-02-00	BACKING PLATE, (RH)	2	(FOR R/S FRONT & REAR WHEELS ONLY)
2	JN3-F5340-00-00	.SHOE, BRAKE SET	1	(FOR ONE WHEEL)
3	JG5-F819G-00-00	.REPAIR PARTS KIT	2	
4	JG5-F7286-00-00	.COVER, DUST	2	
5	JN6-F722F-00-00	.LEVER ADJUSTER (RH)	2	

FIG. 18 BRAKE 3

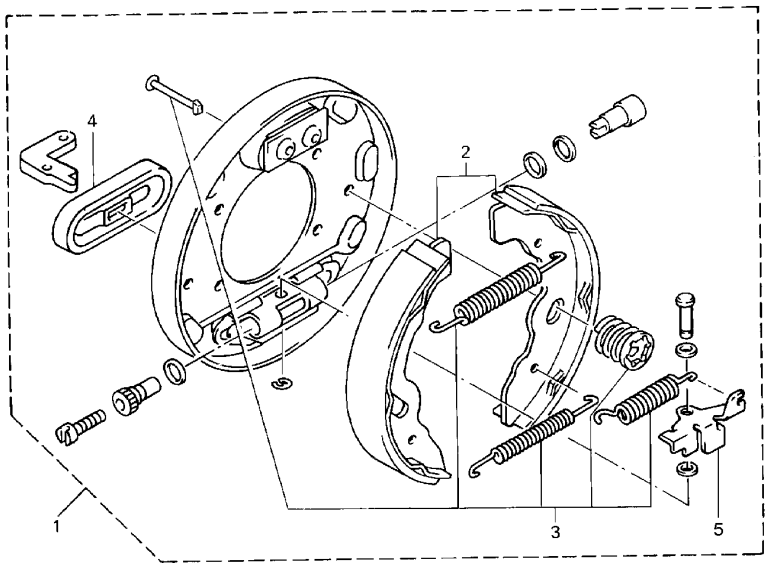

REF NO.	PART NUMBER	DESCRIPTION	QTY	REMARKS
1	JN6-F7290-02-00	BACKING PLATE, (LH)	2	(FOR L/S FRONT & REAR WHEELS ONLY)
2	JN3-F5330-00-00	.SHOE, BRAKE SET	1	(FOR ONE WHEEL)
3	JG5-F819G-00-00	.REPAIR PARTS KIT	2	
4	JG5-F7286-00-00	.COVER, DUST	2	
5	JN6-F722E-00-00	.LEVER ADJUSTER (LH)	2	

FIG. 19 ACCELERATOR

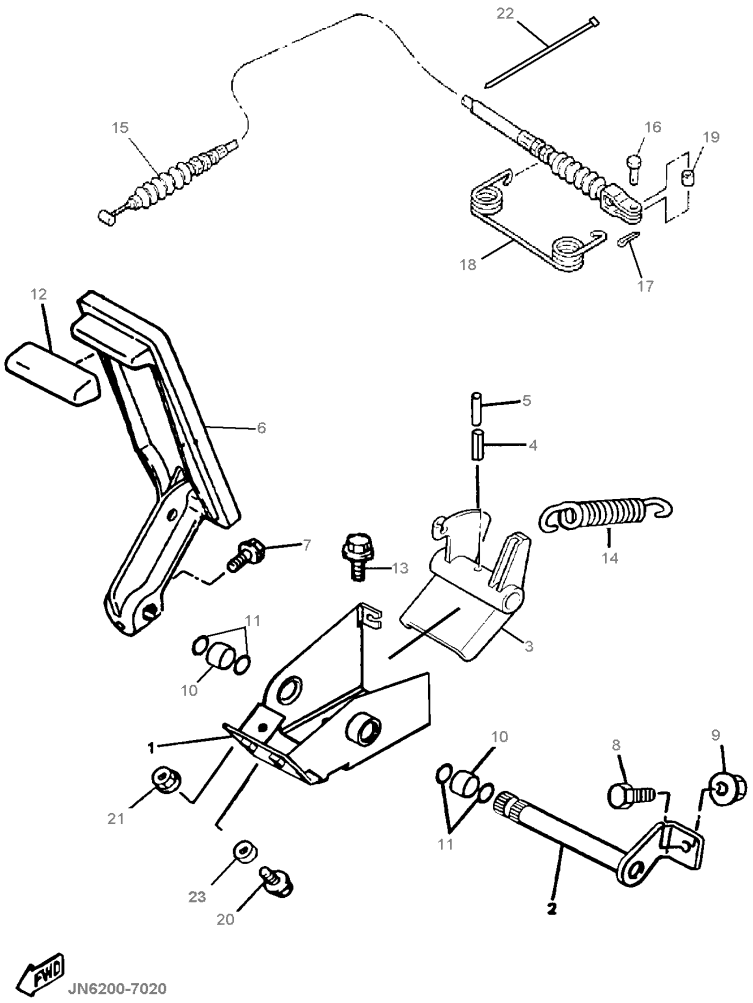

REF NO.	PART NUMBER	DESCRIPTION	QTY	REMARKS
1	JN6-F7874-01-00	BRACKET, PEDAL	1	
2	J17-27853-01-00	SHAFT, PEDAL	1	
3	J38-27872-00-00	ARM, ACCELERATOR	1	
4	91609-60028-00	PIN, SPRING	1	
5	91609-35028-00	PIN, SPRING	1	
6	J10-27871-01-00	PEDAL, ACCELERATOR	1	
7	95817-06025-00	BOLT, FLANGE	1	
8	90106-08040-00	BOLT, RD. HEX	1	
9	90179-08491-00	NUT, FLANGE	1	
10	90384-14080-00	BUSH, BIMETAL	2	
11	93210-14579-00	O-RING	4	
12	JN3-F7854-00-00	COVER, PEDAL	1	
13	95817-08016-00	BOLT, HEX. H	3	
14	90506-26282-00	SPRING, TENSION	1	
15	JJ3-F6311-00-00	WIRE, THROTTLE	1	
16	91790-05012-00	PIN	1	
17	90468-10050-00	CLIP	1	
18	90508-16460-00	SPRING, TORSION	1	
19	90560-05001-00	SPACER	1	
20	95817-06025-00	BOLT, FLANGE	1	
21	95707-06500-00	NUT, FLANGE	1	
22	90601-200U1-00	BAND	1	
23	90387-068T4-00	COLLAR	1	

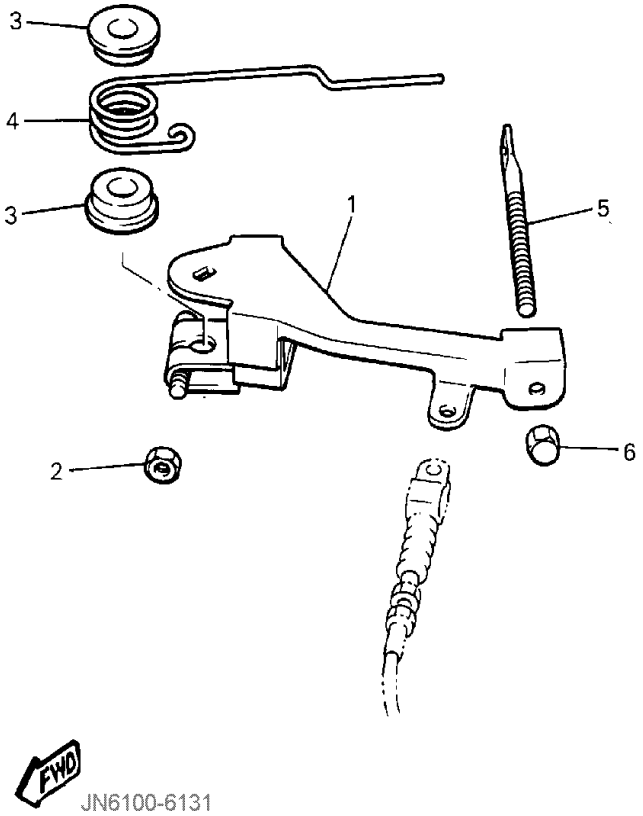

FIG. 20 GOVERNOR

REF NO.	PART NUMBER	DESCRIPTION	QTY	REMARKS
1	J38-27951-00-00	LEVER, SPEED	1	
2	95317-06600-00	NUT, HEX.	1	
3	90386-08141-00	BUSH	2	
4	90508-40678-00	SPRING, TORSION	1	
5	J38-27959-00-00	SCREW, ADJUSTING	1	
6	95607-06200-00	NUT, U-FLANGE	1	
7	JN3-G6555-00-00	BRACKET 2	1	
8	90105-08859-00	BOLT, FLANGE	1	

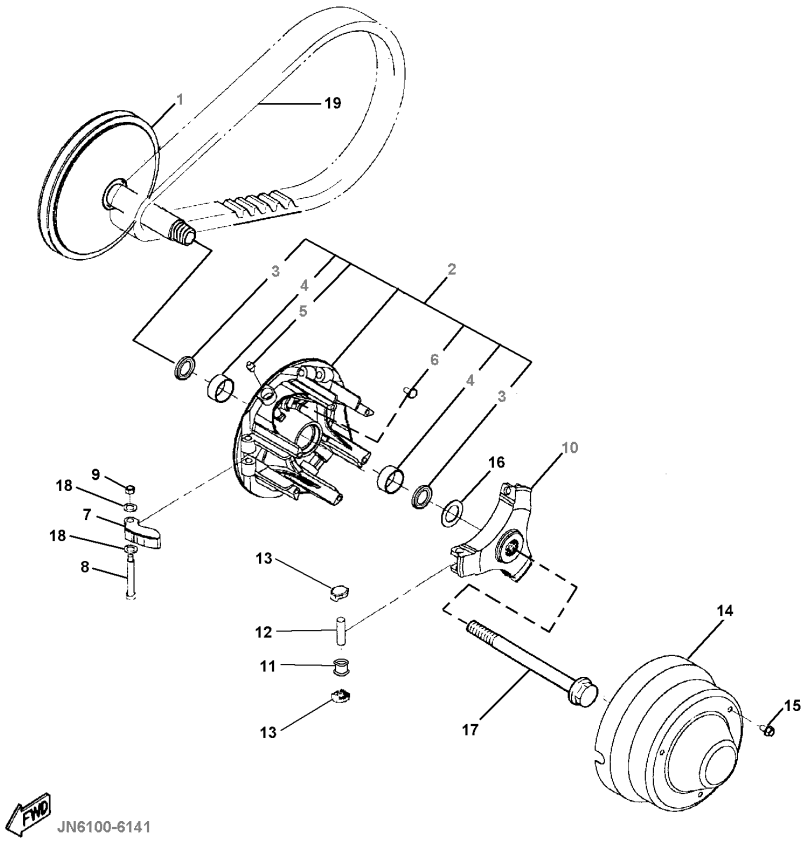

FIG. 21 PRIMARY CLUTCH

REF NO.	PART NUMBER	DESCRIPTION	QTY	REMARKS
	JN6-G6201-00-00	PRIMARY CLUTCH ASSEMBLY	1	SEE NOTE “A”
1	JN6-G6210-00-00	PRIMARY FIXED SHEAVE	1	
2	JN6-G6220-00-00	PRIMARY SLIDING SHEAVE	1	
3	93101-28831-00	.SEAL, OIL	2	
4	90384-27823-00	.BUSH, BIMETAL	2	
5	93700-06810-00	.NIPPLE, GREASE	1	
6	90338-04840-00	.PLUG	3	
7	JN6-G6232-00-00	WEIGHT, 1	3	
8	90109-06860-00	BOLT	3	
9	90185-06834-00	NUT, SELF-LOCKING	3	
10	JN6-G6251-00-00	SPIDER	1	
11	JN6-G6258-01-00	COLLAR, ROLLER	3	
12	93610-358A3-00	PIN, DOWEL	3	
13	JN6-G6253-00-00	SLIDER	6	
14	JN6-G6231-00-00	CAP	1	
15	90105-06861-00	BOLT, FLANGE	3	
16	90201-228K5-00	WASHER, PLAIN	1	
17	JN6-G6249-00-00	BOLT	1	
18	JN6-G621F-00-00	SHIM, THRUST	6	
19	J55-G6241-00-00	BELT	1	

NOTE “A“: Assembly includes all parts except REF. Numbers 14, 15, 17 and 19 (the cap, 3 flange bolts for cap, the main bolt for the Primary Clutch assembly and the belt).

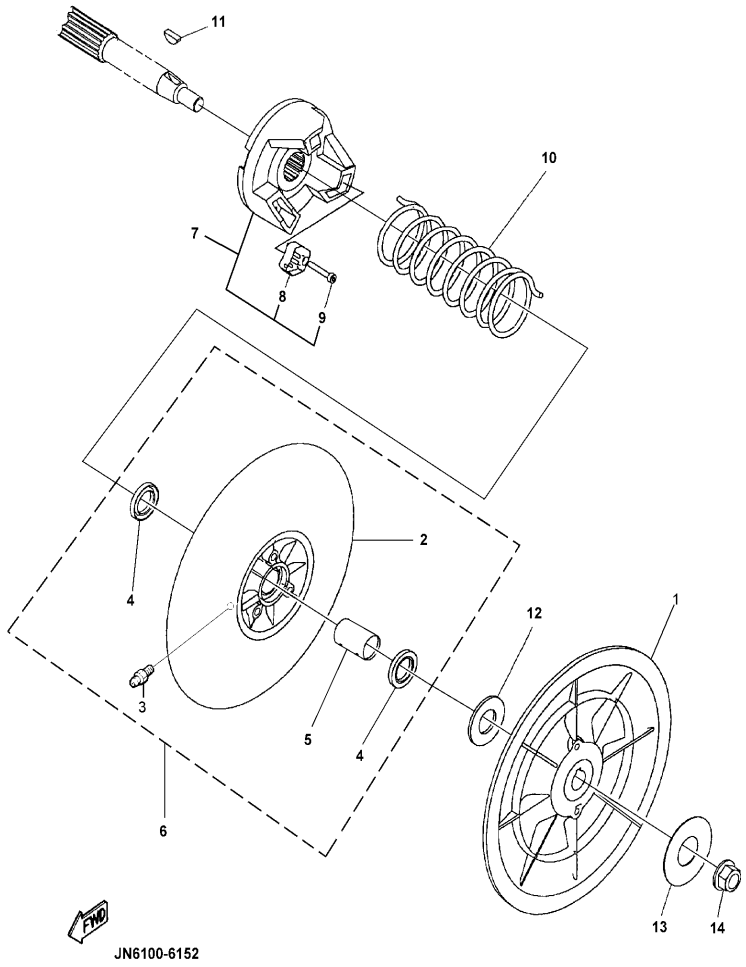

FIG. 22 SECONDARY SHEAVE

REF NO.	PART NUMBER	DESCRIPTION	QTY	REMARKS
1	JN6-G6260-00-00	SECONDARY FIXED SHEAVE	1	
2	JN6-G6271-02-00	SECONDARY SLIDING SHEAVE	1	
3	93700-06809-00	.NIPPLE, GREASE	1	
4	93109-20069-00	.SEAL, OIL	2	
5	90384-20143-00	BUSHING	1	
6	JN6-G6270-0I-KT	SECONDARY SLIDING SHEAVE KIT	1	SEE NOTE “A”
7	JN6-G6280-00-00	SECONDARY SPRING SEAT	1	
8	JN6-E7688-00-00	.SHOE, RAMP	3	
9	90110-04834-00	.BOLT, HEX. SOCKET	3	
10	90508-45844-00	SPRING, TORSION	1	L=100.5mm±1.5
11	90202-20130-00	WASHER, PLAIN	1	
12	90280-05022-00	KEY, WOODRUFF	1	
13	90201-12588-00	WASHER, PLAIN	1	
14	95607-12200-00	NUT, U-FLANGE	1	

NOTE “A”: Secondary sheave kit includes oil seals, bushing, and grease nipple.

FIG. 23 TRANSMISSION 1

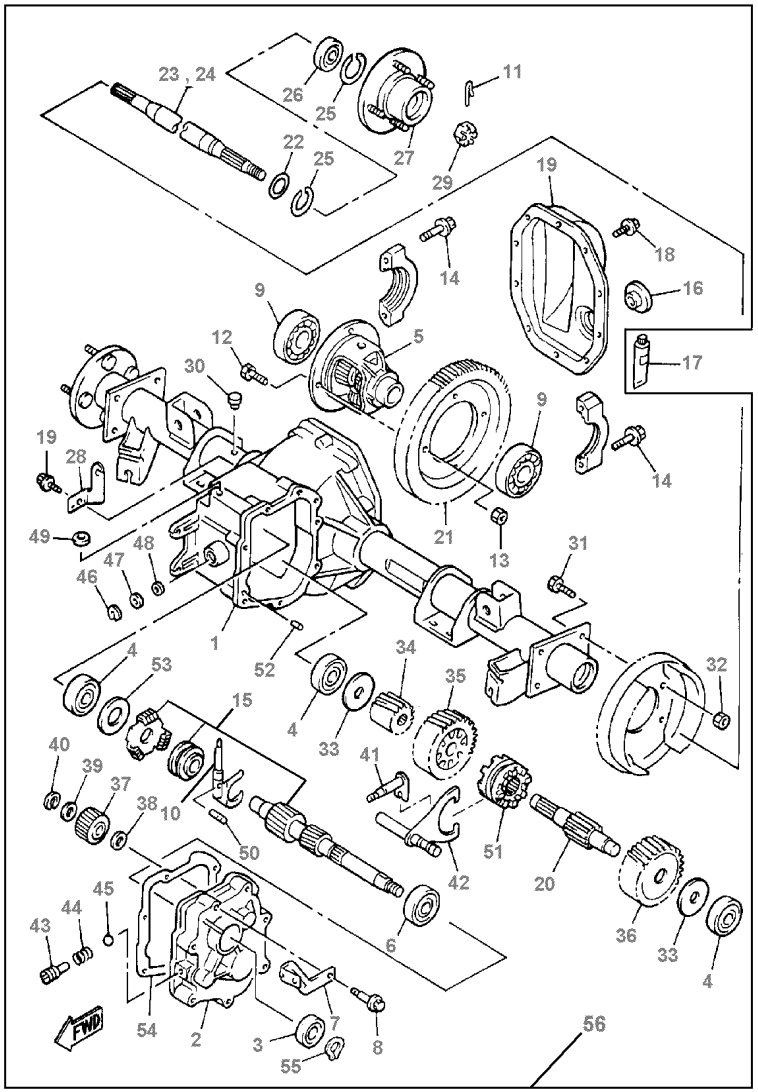

JR2010-6222

REF NO.	PART NUMBER	DESCRIPTION	QTY	REMARKS
1	JR3-G6290-00-00	CASE ASSY	1	
2	JN3-G6313-00-00	COVER, TRANSMISSION	1	
3	93102-25868-00	SEAL, OIL	1	
4	93306-303Y6-00	BEARING	3	
5	JN6-G6410-00-00	DIFFERENTIAL ASSY.	1	
6	93306-005Y4-00	BEARING	1	
7	JN6-G6555-00-00	BRACKET, 2	1	
8	90105-08859-00	BOLT, FLANGE	7	
9	93306-007Y0-00	BEARING	2	
10	JN3-G633E-01-00	BAR, 1	1	
11	91490-25030-00	PIN, SPLIT	2	
12	90101-10854-00	BOLT, HEX.	4	
13	90170-10840-00	NUT, HEX.	4	
14	90105-10840-00	BOLT, FLANGE	4	
15	JR6-G6320-00-00	SHAFT, INPUT ASSY.	1	
16	JN3-G6432-00-00	STOPPER	1	
17	ACC-QUICK-GS-KT	SEALANT	1	
18	90101-08856-00	BOLT, HEX.	11	
19	JN3-G6314-00-00	COVER, TRANSMISSION	1	
20	JN3-G633G-00-00	SHAFT	1	
21	JN3-G6355-00-00	GEAR, PRIMARY	1	
22	93101-31836-00	SEAL, OIL	2	
23	JR3-G6511-00-00	SHAFT, RR. AXLE	1	
24	JR3-G6512-00-00	SHAFT, RR. AXLE	1	
25	93420-52806-00	CIRCLIP	4	
26	93306-205X2-00	BEARING	2	
27	JR3-G6514-00-00	HUB, RR. AXLE	2	

FIG. 23 TRANSMISSION 1

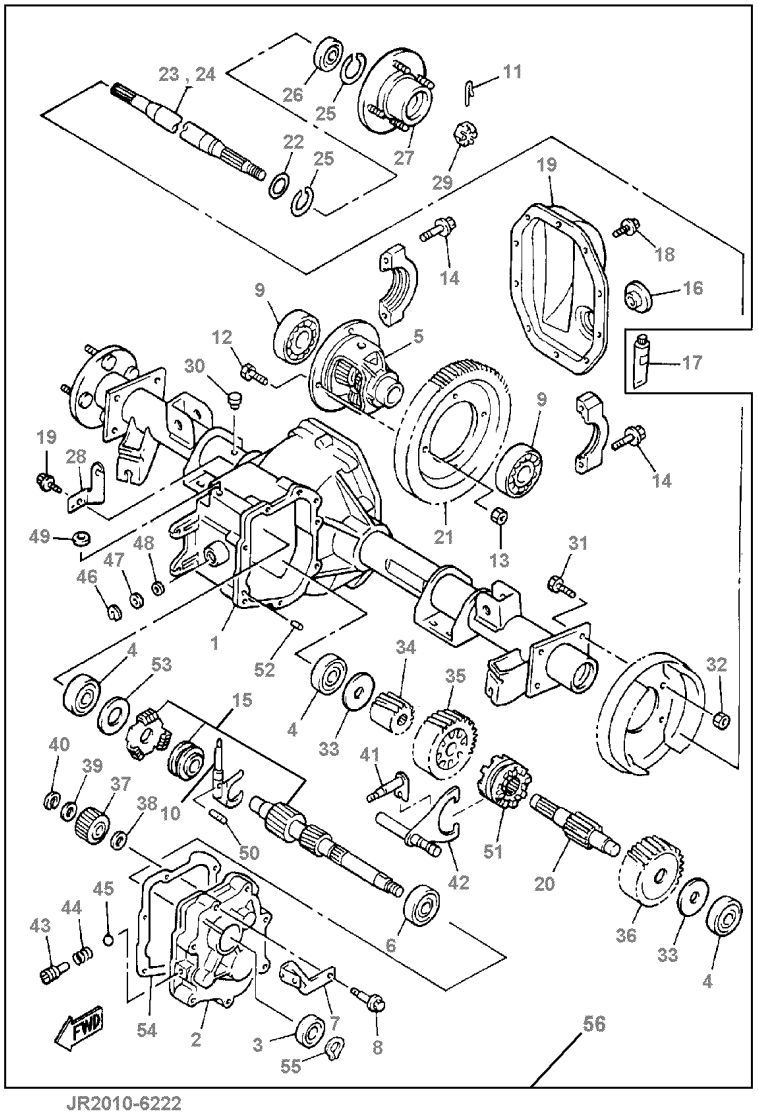

JR2010-6222

REF NO.	PART NUMBER	DESCRIPTION	QTY	REMARKS
28	JN3-G6556-00-00	BRACKET, 3	1	
29	90185-16833-00	NUT, SELF-LOCKING	2	
30	JH7-G5619-00-00	CAP	1	
31	90101-08855-00	BOLT, HEX.	8	
32	90170-08841-00	NUT, HEX.	8	
33	90201-178H8-00	WASHER, PLAIN	2	
34	JN3-G6316-00-00	GEAR, PINION	1	
35	JR6-G6326-00-00	GEAR, WHEEL 1	1	
36	JN3-G6327-00-00	GEAR, WHEEL 2	1	
37	JN3-G6356-00-00	GEAR, IDLER	1	
38	90201-208H9-00	WASHER, PLAIN	1	
39	90201-208J0-00	WASHER, PLAIN	1	
40	93440-20813-00	CIRCLIP	1	
41	JN3-G638A-00-00	BAR, SHIFT 1	1	
42	JN6-G638E-00-00	BAR, SHIFT 2	1	
43	90113-08803-00	BOLT, SET	1	
44	90501-10852-00	SPRING, COMPRESSION	1	
45	93500-06826-00	BALL	1	
46	93410-12822-00	CIRCLIP	1	
47	90202-12807-00	WASHER, PLAIN	1	
48	93104-11829-00	SEAL, OIL	1	
49	93109-10820-00	SEAL, OIL	1	
50	JN3-G6249-00-00	BOLT	1	
51	JN3-G6153-00-00	COLLAR, GUIDE	1	
52	93606-10842-00	PIN, DOWEL	2	
53	JN3-G6344-00-00	SHIM	1	0.76mm (0.030in)
	JN3-G6344-10-00	SHIM	1	0.90mm (0.035in)

FIG. 23 TRANSMISSION 1

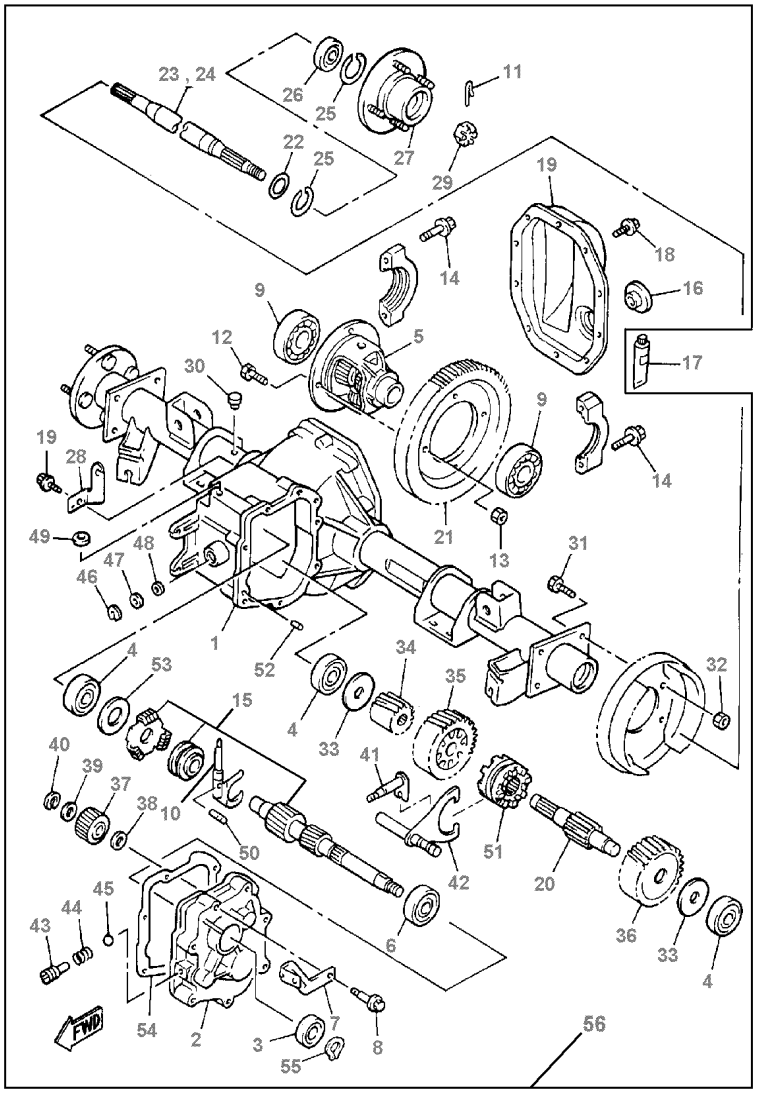

JR2010-6222

REF NO.	PART NUMBER	DESCRIPTION	QTY	REMARKS
	JN3-G6344-20-00	SHIM	1	1.0mm (0.040in)
	JN3-G6344-30-00	SHIM	1	1.14mm (0.045in)
	JN3-G6344-40-00	SHIM	1	1.27mm (0.050in)
	JN3-G6344-50-00	SHIM	1	1.39mm (0.055in)
	JN3-G6344-60-00	SHIM	1	1.52mm (0.060in)
	JN3-G6344-70-00	SHIM	1	1.65mm (0.065in)
	JN3-G6344-80-00	SHIM	1	0.38mm (0.015in)
	JN3-G6344-90-00	SHIM	1	1.78mm (0.070in)
	JN3-G6344-A0-00	SHIM	1	1.92mm (0.075in)
	JN3-G6344-B0-00	SHIM	1	2.03mm (0.080in)
	JN3-G6344-C0-00	SHIM	1	2.12mm (0.085in)
	JN3-G6344-D0-00	SHIM	1	2.29mm (0.090in)
54	JN3-G6319-00-00	GASKET	1	
55	93410-25017-00	CIRCLIP	1	
56	JR6-G6300-00-00	TRANSAXLE ASSEMBLY	1	

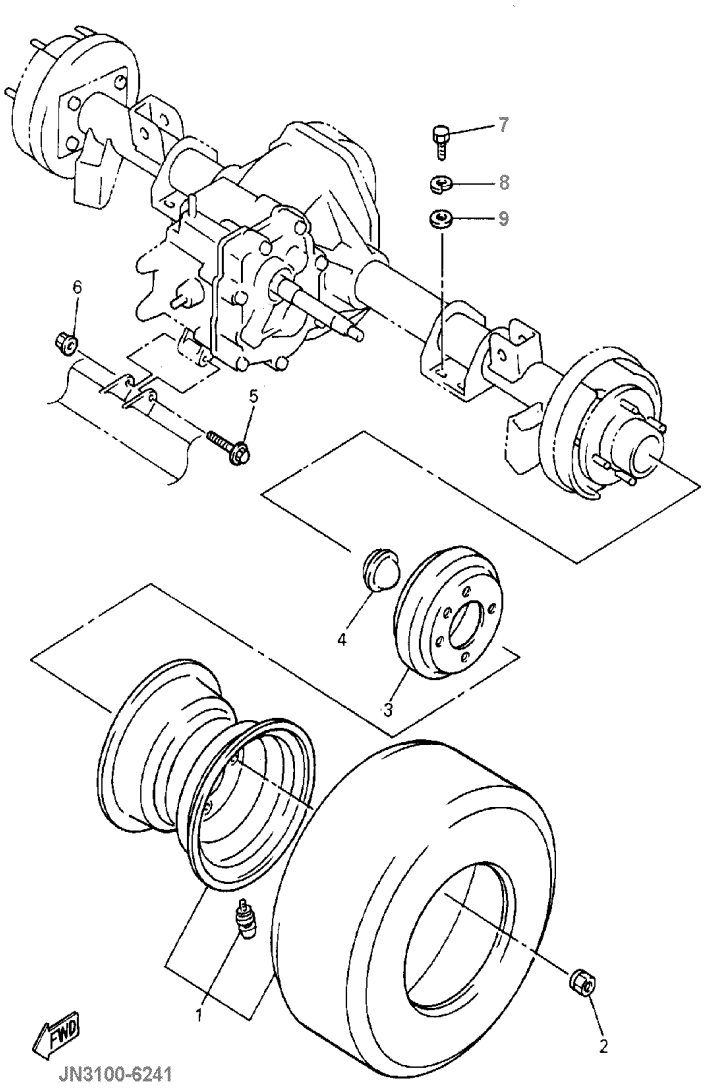

FIG. 24 REAR AXLE MOUNT / WHEEL

REF NO.	PART NUMBER	DESCRIPTION	QTY	REMARKS
1	JR6-F5300-00-00	WHEEL ASSY.	2	
2	90179-12262-00	NUT	8	
3	J55-G6521-00-00	DRUM	2	
4	JN6-F5118-00-00	COVER, HUB DUST	2	
5	95817-08075-00	BOLT, FLANGE	1	
6	90179-08491-00	NUT, FLANGE	1	
7	97017-10020-00	BOLT	8	
8	92907-10100-00	WASHER, LOCK	8	
9	90201-102G9-00	WASHER	8	

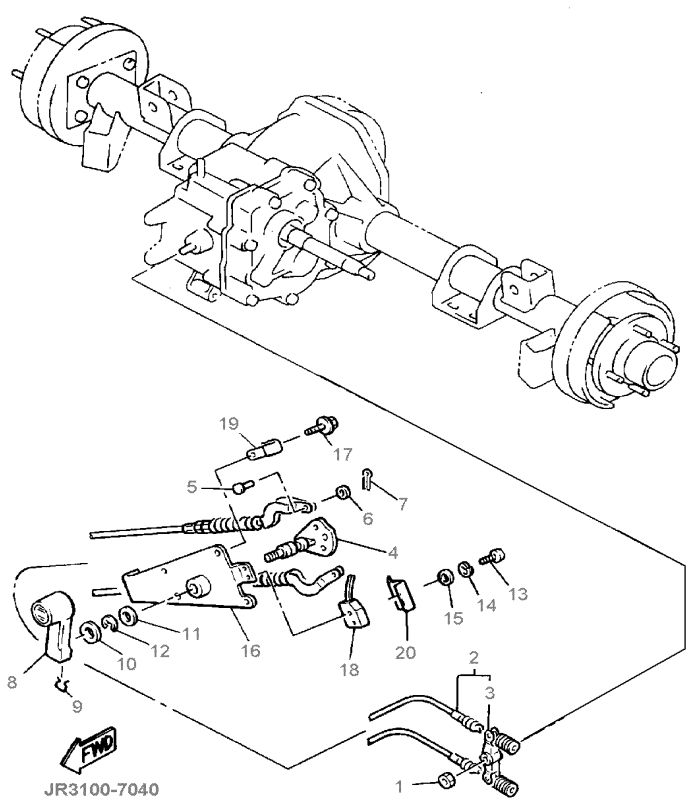

FIG. 25 SHIFTER / CABLES

REF NO.	PART NUMBER	DESCRIPTION	QTY	REMARKS
1	95617-08100-00	NUT, U	1	
2	JJ3-G8330-01-00	CABLE, SHIFT	2	
3	J55-G6383-00-00	.LEVER, SHIFT 2	1	
4	JF2-46382-00-00	LEVER, SHIFT 1	1	
5	91702-06014-00	PIN	2	
6	92907-06600-00	WASHER, PLAIN	2	
7	91490-20025-00	PIN, SPLIT	2	
8	JN3-G6381-00-00	KNOB, SHIFT	1	
9	JN3-G6376-00-00	SPRING SET	1	
10	90201-201L9-00	WASHER, PLAIN	1	
11	90201-19551-00	WASHER, PLAIN	1	
12	99009-19400-00	CIRCLIP (S)	1	
13	98507-04016-00	SCREW, PANHEAD	2	
14	92907-04100-00	WASHER, LOCK	2	
15	92907-04600-00	WASHER	2	
16	JN3-G6372-00-00	BRACKET, SHIFT	1	
17	95817-06016-00	BOLT, FLANGE	4	
18	JN3-82617-00-00	SWITCH	1	
19	90465-06038-00	CLAMP	1	
20	JJ3-G6394-00-00	JOINT	1	

FIG. 26 BUMPER

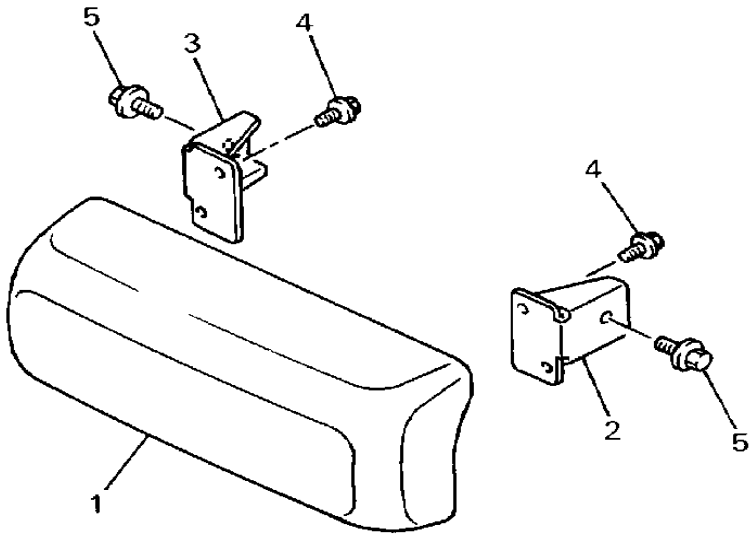

REF NO.	PART NUMBER	DESCRIPTION	QTY	REMARKS
1	JN3-K7510-02-00	FRONT BUMBER COMP.	1	
2	JN3-K8164-00-00	STAY, FR. BUMPER	1	
3	JN3-K8165-00-00	STAY, FR. BUMPER	1	
4	95817-06016-00	BOLT, FLANGE	4	
5	95817-08016-00	BOLT, FLANGE	2	

FIG. 27 BODY

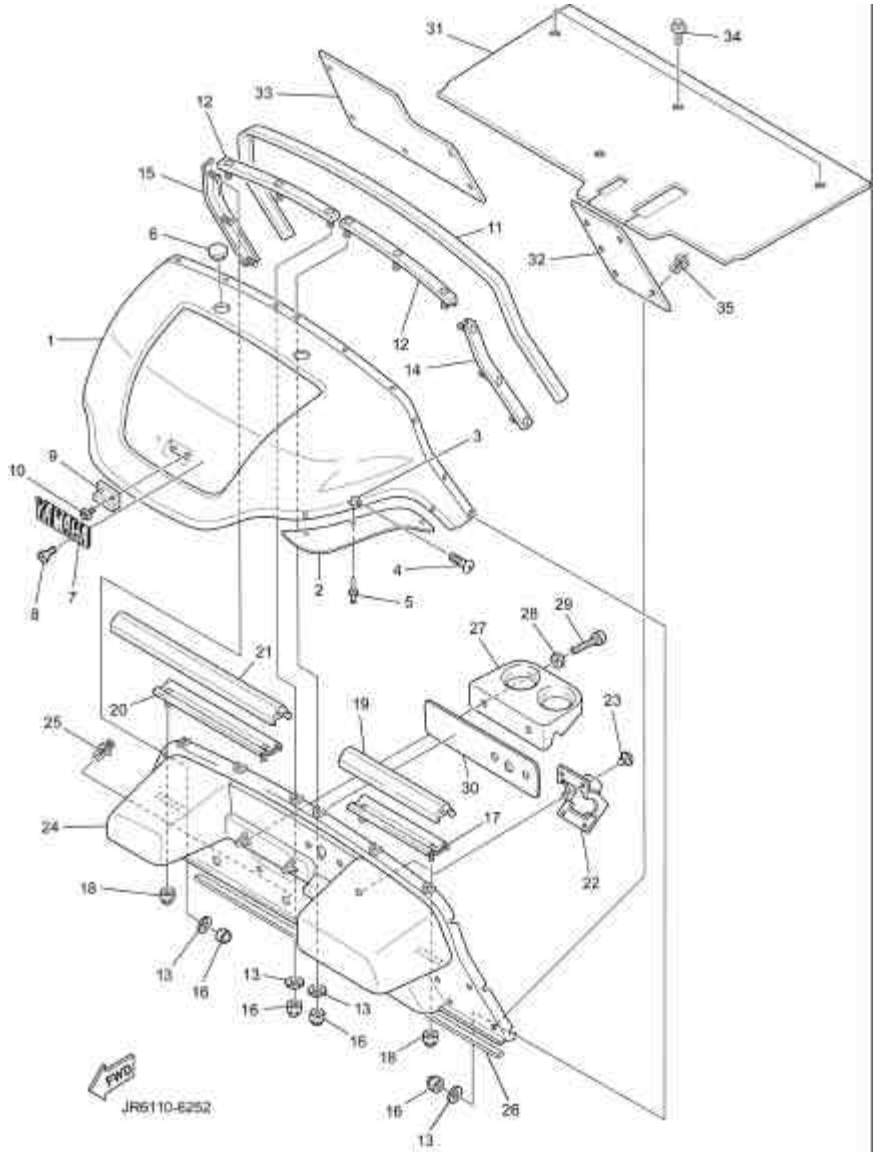

REF NO.	PART NUMBER	DESCRIPTION	QTY	REMARKS
1	JN3-K8115-20-00	COWL, FRONT	1	HUNTER GREEN
2	JR6-F1551-00-00	FENDER, OVER 1	2	
3	JR6-F1546-00-00	STAY, FENDER 3	6	
4	90110-06836-00	BOLT, HEX SOCKET	6	
5	90267-48831-00	RIVET, BLIND	6	
6	JN3-K818E-00-00	CAP, PROTECTOR	2	
7	JN6-F4161-00-00	EMBLEM, 1	1	
8	90162-04002-00	SCREW, OVAL C	2	
9	JF2-K811G-00-00	BOLT, COWL FITTING	1	
10	98980-06016-00	SCREW, BINDING	2	
11	JF2-K811V-00-00	PROTECTOR, 1	1	
12	JF2-K8261-02-00	PLATE, BODY PROTECTOR	2	
13	JN3-K8117-00-00	PLATE, 1	12	
14	JF2-K8262-01-00	PLATE, BODY PROTECTOR	1	
15	JF2-K8263-01-00	PLATE, BODY PROTECTOR	1	
16	90185-06836-00	NUT, SELF-LOCKING	12	
17	JF2-K8264-00-00	PLATE, BODY PROTECTOR	1	
18	95607-06200-00	NUT, U-FLANGE	24	
19	JF2-K811W-00-00	PROTECTOR 2	1	
20	JF2-K8265-00-00	PLATE, BODY PROTECTOR	1	
21	JF2-K811X-00-00	PROTECTOR 3	1	
22	JF2-78273-00-00	COVER, HOLE 1	1	
23	90269-11042-00	RIVET	4	
24	JF2-K8114-02-00	PANEL, FRONT	1	SEE NOTE “A”
25	90269-08069-00	RIVET	3	
26	JN3-K815G-00-00	SEAL, FRONT STORAGE	1	
27	JF2-K835E-00-00	HOLDER, BEVERAGE	1	
28	90201-060A3-00	WASHER, PLATE	2	

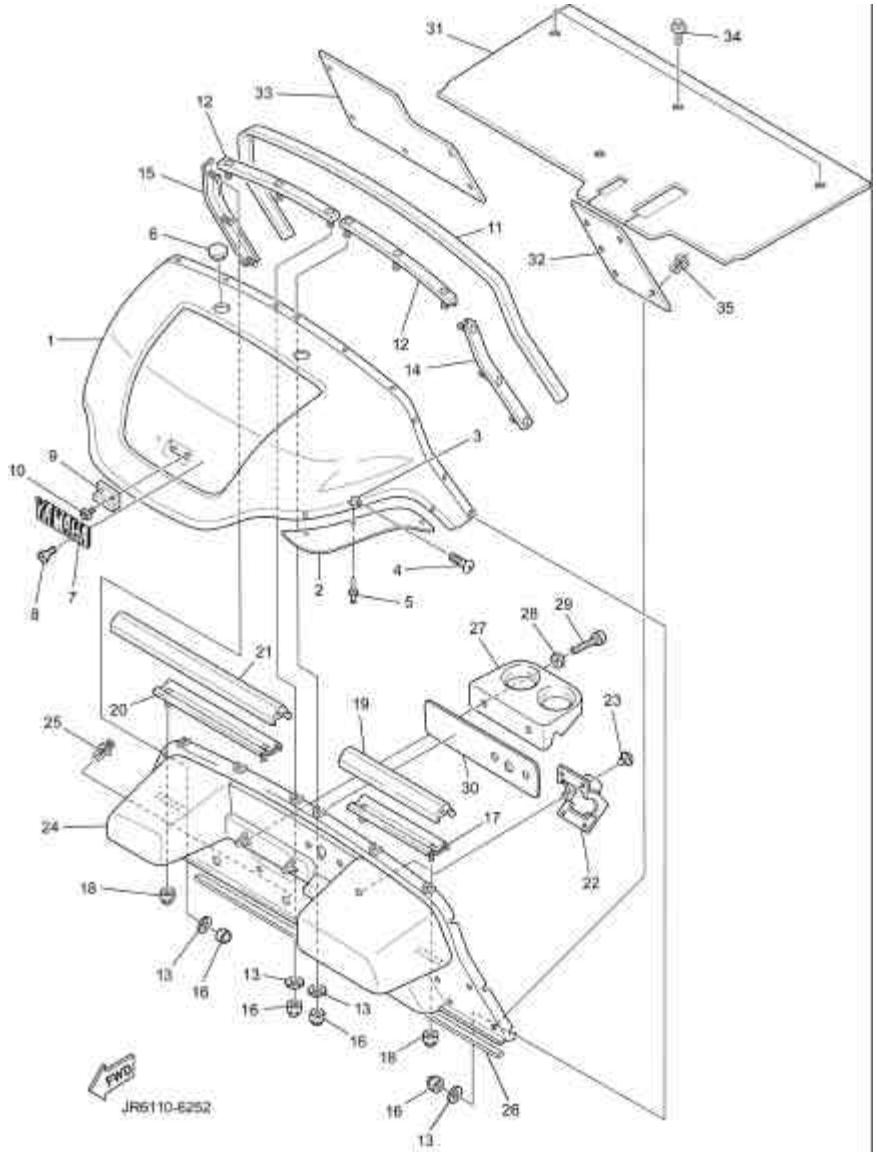

FIG. 27 BODY

REF NO.	PART NUMBER	DESCRIPTION	QTY	REMARKS
29	97707-60130-00	SCREW, TAPPING	2	
30	JJ3-K7761-00-00	LABEL, WARNING 1	1	SEE NOTE “A”
31	JN6-K8233-00-00	MAT, MAIN FLOOR 3	1	
32	JN6-K8231-00-00	MAT, MAIN FLOOR 1	1	
33	JN6-K8232-00-00	MAT, MAIN FLOOR 2	1	
34	90269-08813-00	RIVET	4	
35	90267-63047-00	RIVET, BLIND	9	

NOTE “A”: When replacing “Panel Front JF2-K8114-02-00” you should also replace “Label Warning 1 JR6-K7761-00-00”.

FIG. 28 BODY 2

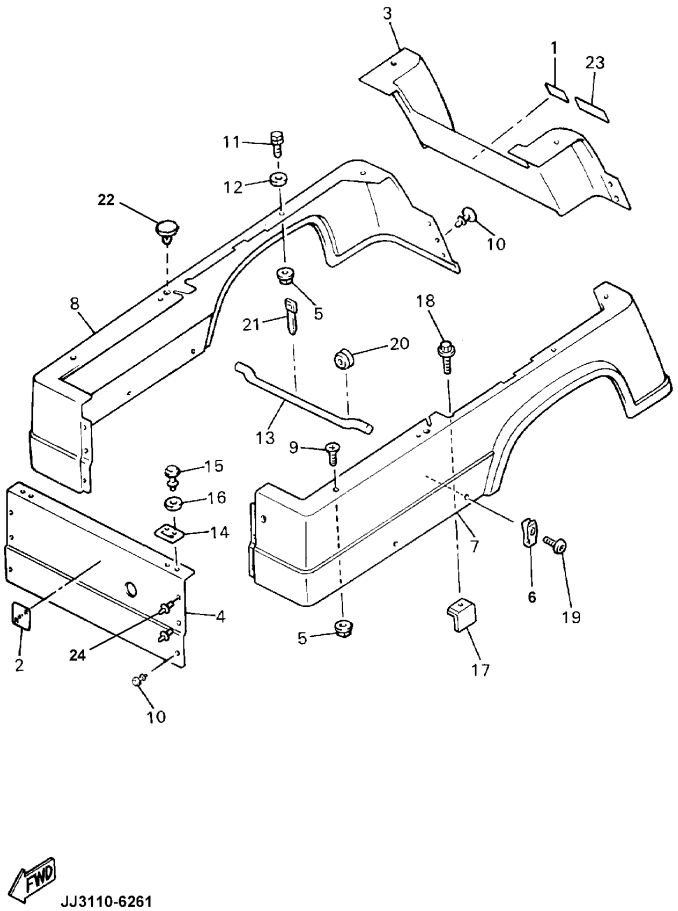

REF NO.	PART NUMBER	DESCRIPTION	QTY	REMARKS
1	JJ3-K7765-00-00	LABEL, WARNING 5	1	HUNTER GREEN, SEE NOTE "A"
2	JN3-K7741-00-00	INDICATOR 1	1	HUNTER GREEN, SEE NOTE "B"
3	JJ3-K8142-50-00	PANEL, REAR	1	HUNTER GREEN, SEE NOTE "A"
4	JJ3-K8141-50-00	PANEL, INTERMEDIATE BODY	1	HUNTER GREEN, SEE NOTE "B"
5	90183-06810-00	NUT, SPRING	10	
6	90183-06811-00	NUT, SPRING	4	
7	JJ3-K8111-50-00	PANEL, BODY SHELL	1	HUNTER GREEN
8	JJ3-K8112-50-00	PANEL, BODY SHELL	1	HUNTER GREEN
9	90151-06040-00	SCREW, COUNTERSUNK	2	
10	90267-62841-00	RIVET, BLIND	6	
11	90119-06824-00	BOLT, WITH WASHER	8	
12	90201-065F3-00	WASHER, PLATE	8	
13	JJ3-K8226-00-00	ROD, SEAT STOPPER	1	
14	JJ3-K8427-01-00	HINGE, SEAT 2	2	
15	90267-64834-00	RIVET, BLIND	4	
16	90201-08681-00	WASHER, PLATE	4	
17	JJ3-K814H-00-00	HOOK, BODY LOCK	2	
18	90119-08903-00	BOLT, WITH WASHER	2	
19	90110-06200-00	BOLT, HEXAGON SOCKET HEAD	4	
20	90480-13018-00	GROMMET	1	
21	90464-10814-00	CLAMP	1	
22	4XE-F747-00-00	BUMPER, RUBBER 1	2	
23	JJ3-K7768-00-00	LABEL, WARNING 8	1	SEE NOTE "A"
24	90267-36853-00	RIVET, BLIND	4	

NOTE "A": When replacing "Panel Rear Body JJ3-K8142-50-00" you must also replace "Label Warning 5 JJ3-K7765-00-00", and "Label Warning 8 JJ3-K7768-00-00".

NOTE "B": When replacing "Panel Intermediate Body JJ3-K8141-50-00" you must also replace "Indicator 1 JN3-K7741-00-00".

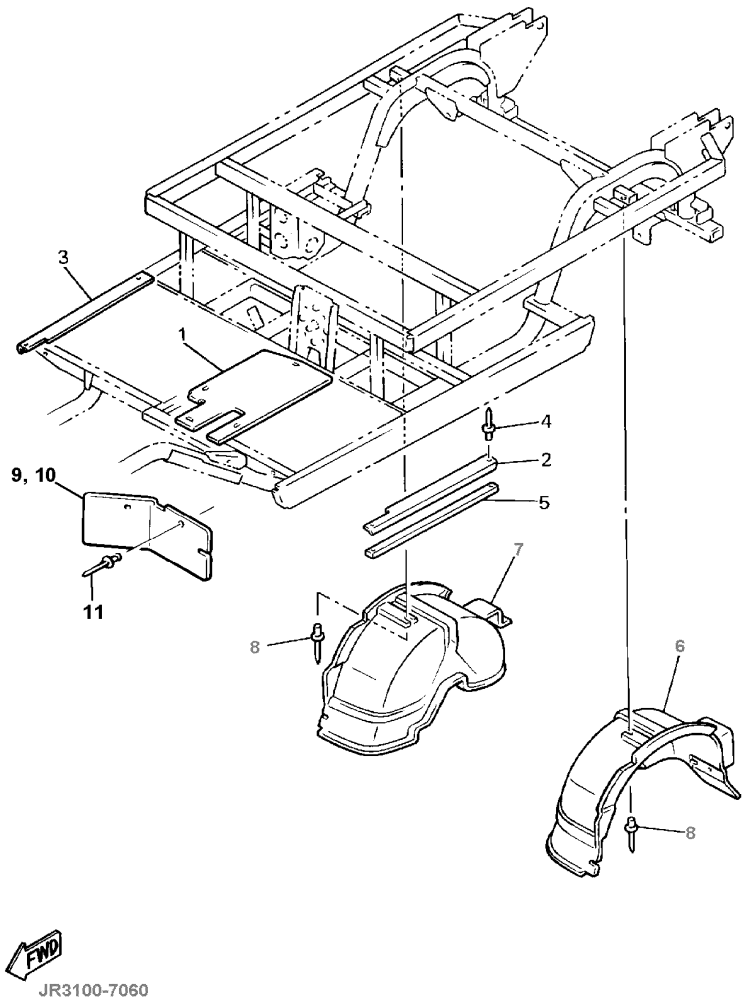

FIG. 29 BODY FITTING

REF NO.	PART NUMBER	DESCRIPTION	QTY	REMARKS
1	JN6-K8271-00-00	SERVICE LID	1	
2	JF2-K8215-10-00	PLATE, SIDE TRIM	1	
3	JF2-K821F-10-00	PLATE, SIDE TRIM	1	
4	90267-48154-00	RIVET, BLIND	4	
5	JJ3-K8124-00-00	REINFORCEMENT 4	2	
6	JJ3-K8191-00-00	PANEL, REAR FENDER 1	1	
7	JJ3-K8192-00-00	PANEL, REAR FENDER 2	1	
8	90267-48101-00	RIVET, BLIND	6	
8	JF2-K8187-00-00	FLAP, FRONT FENDER LEFT	1	
9	JF2-K8189-00-00	FLAP, FRONT FENDER RIGHT	1	
10	90267-48831-00	RIVET, BLIND	4	

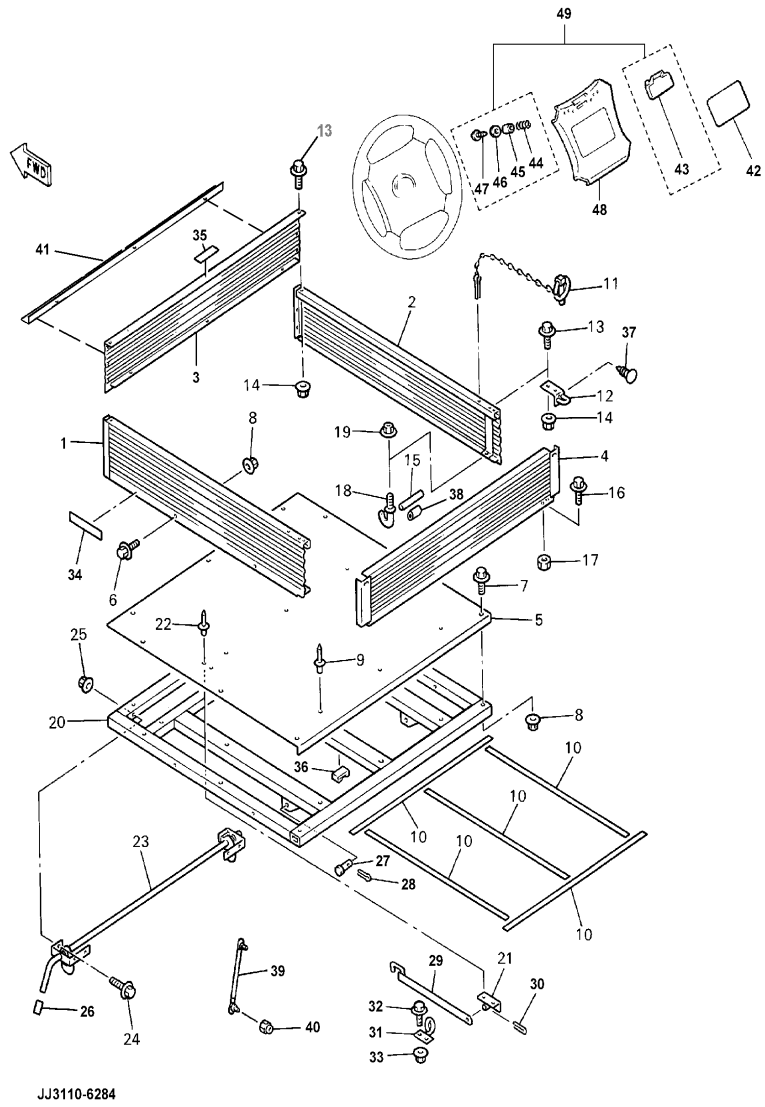

FIG. 30 CARRIER

REF NO.	PART NUMBER	DESCRIPTION	QTY	REMARKS
1	JJ3-K810F-00-00	SIDE PANEL COMP. (LH)	1	SEE NOTE “A”
2	JJ3-K810G-00-00	SIDE PANEL COMP. (RH)	1	
3	JJ3-K7782-00-00	PANEL, DASH 2	1	SEE NOTE “B”
4	JJ3-K810N-00-00	REAR STORAGE LID COMP.	1	
5	JJ3-K8117-00-00	PLATE 1	1	
6	90119-08038-00	BOLT, WITH WASHER	19	
7	90119-08925-00	BOLT, WITH WASHER	2	
8	90185-08169-00	NUT, SELF-LOCKING	21	
9	90267-64844-00	RIVET, BLIND	6	
10	JJ3-K821A-00-00	PAD, BODY MOUNTING 1	5	
11	JR3-K8156-00-00	STOPPER, LOCK	2	
12	JJ3-K8317-00-00	RING, HOOK	2	
13	90119-06908-00	BOLT, WITH WASHER	6	
14	95607-06200-00	NUT, SELF-LOCKING	6	
15	JJ3-K8384-00-00	BOLT	2	
16	97017-06020-00	BOLT	4	
17	9538R-06700-00	NUT	4	
18	JJ3-K8385-00-00	BOLT 2	2	
19	90185-08169-00	NUT, SELF-LOCKING	2	
20	JJ3-K818N-00-00	BED, BOX	1	
21	JJ3-K8376-00-00	SUPPORT 2	1	
22	90267-64844-00	RIVET, BLIND	2	
23	JJ3-K8380-03-00	LOCK ASSY	1	
24	95817-08020-00	BOLT, FLANGE	6	
25	95617-08200-00	NUT, SELF-LOCKING	6	
26	JJ3-K818M-00-00	CAP, PROTECTOR END 4	1	
27	90240-13808-00	PIN, CLEVIS	2	

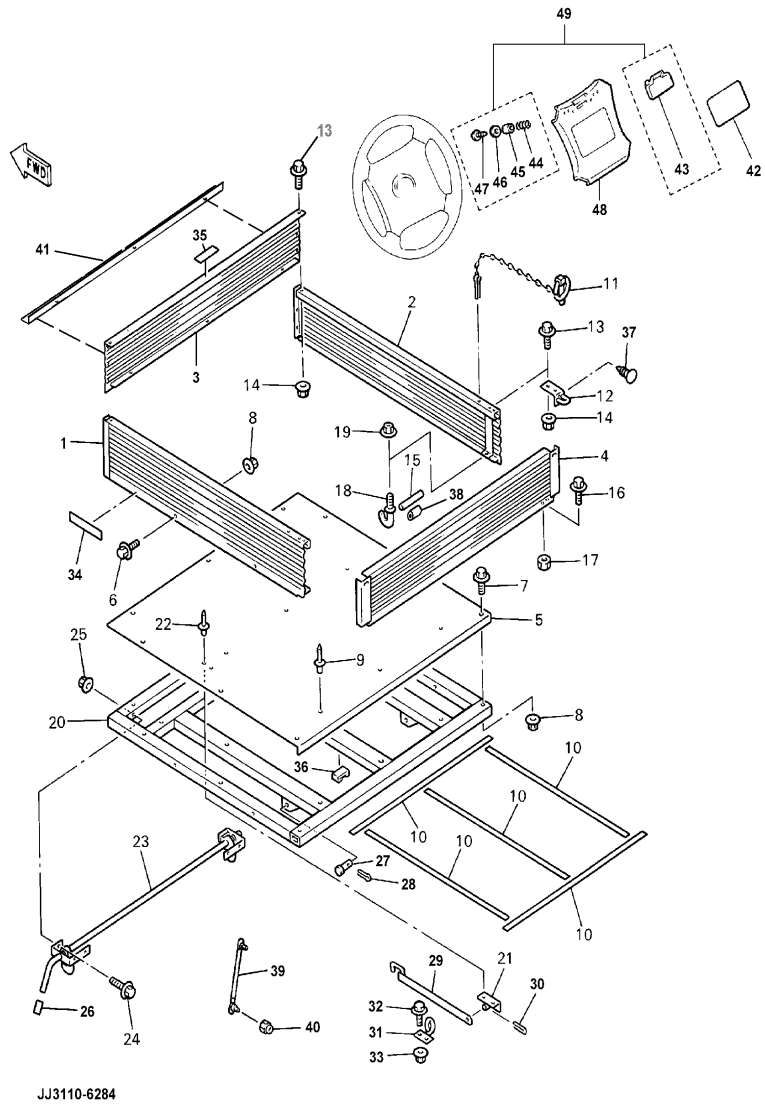

FIG. 30 CARRIER

REF NO.	PART NUMBER	DESCRIPTION	QTY	REMARKS
28	91490-30030-00	PIN, COTTER	2	
29	JJ3-K8158-01-00	ROD, INSPECTION LID	1	
30	91490-20025-00	PIN, COTTER	1	
31	JJ3-K8369-00-00	PIN, LEVER	1	
32	90119-06908-00	BOLT, WITH WASHER	2	
33	95607-06200-00	NUT, SELF-LOCKING	2	
34	JJ3-K7764-01-00	LABEL, WARNING 4	1	SEE NOTE “A”
35	JJ3-K7766-01-00	LABEL, WARNING 6	1	SEE NOTE “B”
36	JJ3-K815H-00-00	DAMPER, LOCK	1	
37	90338-05830-00	PLUG	4	
38	JR3-K8316-00-00	DAMPER	2	
39	JJ3-K7588-00-00	DAMPER 1	1	
40	90185-08169-00	NUT, SELF-LOCKING	2	
41	JR3-K8323-00-00	BRACKET, 1	1	
42	JN3-K7762-01-00	LABEL, WARNING 2	1	SEE NOTE “C”
43	JN6-K8358-00-00	HOLDER 2	1	
44	90502-10013-00	SPRING, CONICAL	2	
45	90387-046N7-00	COLLAR	2	
46	90201-044H9-00	WASHER, PLAIN	2	
47	97707-40625-00	SCREW, PAN HEAD	2	
48	JN3-K8357-00-00	HOLDER 1	1	SEE NOTE “C”
49	JN6-K8358-00-KT	INFORMATION HOLDER KIT	1	SEE NOTE “D”

NOTE “A”: When replacing “Side Panel Comp (LH) JJ3-K810F-00-00” you must also replace “Label Warning 4 JJ3-K7764-01-00”.

NOTE “B”: When replacing “Panel Dash 2 JJ3-K7782-00-00” you must also replace “Label Warning 6 JJ3-K7766-01-00”.

NOTE “C”: When replacing “Holder 1 JN3-K8357-00-00” you must also replace “Label Warning 2 JN3-K7762-01-00”.

NOTE “D”: Includes 43, 44, 45, 46, 47

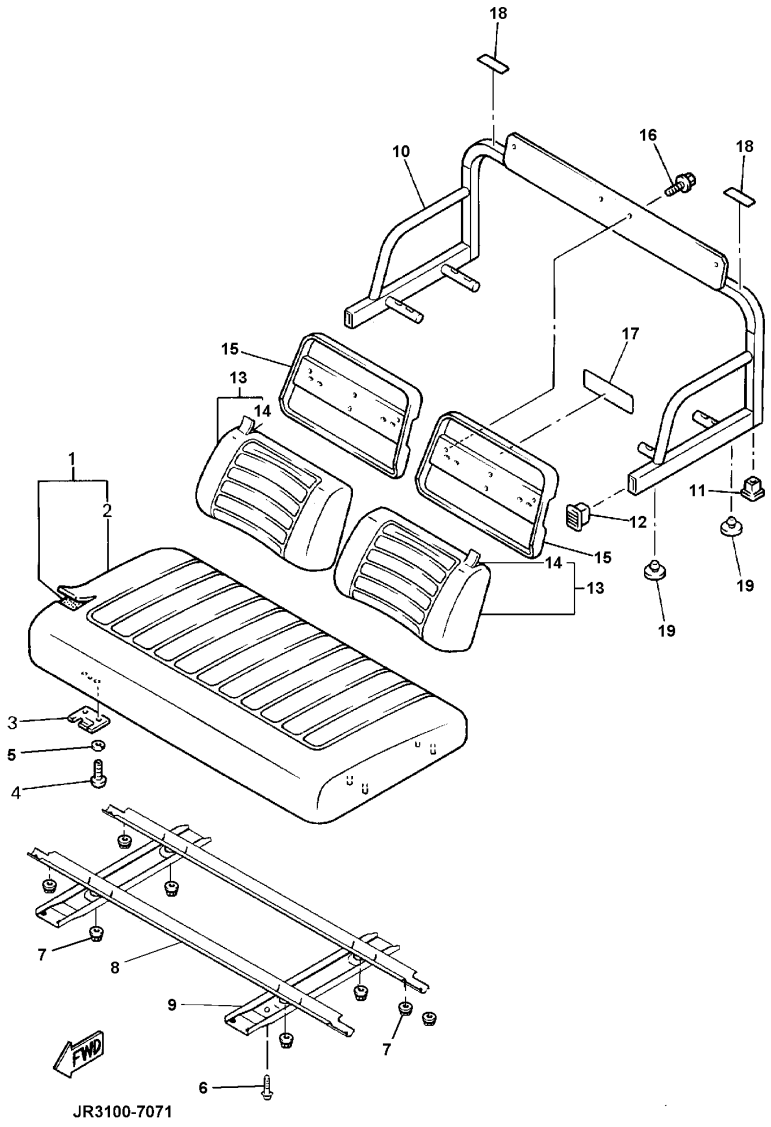

FIG. 31 SEAT

REF NO.	PART NUMBER	DESCRIPTION	QTY	REMARKS
1	JN6-K8401-10-00	CUSHION SEAT	1	
2	JN6-K8404-10-00	.COVER, SEAT	1	
3	JN3-K8426-01-00	HINGE, SEAT MALE	2	
4	90111-06810-00	BOLT, HEX	4	
5	92990-05100-00	WASHER, LOCK	4	
6	90167-04815-00	SCREW, PAN HEAD	4	
7	9560P-08200-00	NUT, SELF-LOCKING	12	
8	JN6-K8121-00-00	REINFORCEMENT 1	2	
9	JN6-K8122-01-00	REINFORCEMENT 2	2	
10	JJ3-K8420-20-00	SEAT ASSY 2	1	SEE NOTE “A”
11	JJ3-K818E-00-00	CAP, PROTECTOR END 1	2	
12	JJ3-K8139-00-00	CAP, END	2	
13	JR3-K8402-10-00	SEAT SUB ASSY, BACK	2	
14	JR3-K841G-09-00	.COVER, SEAT BACK 2	2	
15	JJ3-K8413-00-00	COVER, SEAT BACK	2	SEE NOTE “B”
16	90119-06929-00	BOLT, WITH WASHER	4	
17	JJ3-K7762-00-00	LABEL, WARNING 2	1	SEE NOTE “B”
18	JJ3-K7763-00-00	LABEL, WARNING 3	2	SEE NOTE “A”
19	JJ3-K8433-01-00	DAMPER, SEAT SUPPORT	4	

NOTE “B“: When replacing “Seat Assy 2 JJ3-K8420-20-00” you must also replace “Label Warning 3 JJ3-K7763-00-00”.

NOTE “C“: When replacing the LS “Cover Seat Back JJ3-K8413-00-00” you must also replace “Label Warning 2 JJ3-K7762-00-00”.

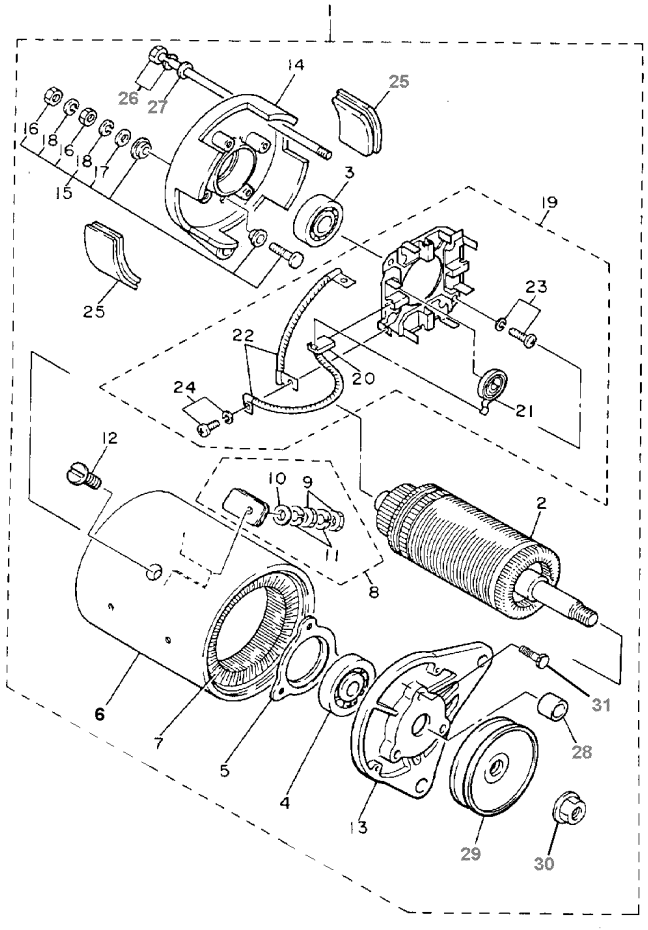

FWD

JN6100-6231

FIG. 32 STARTER GENERATOR

REF NO.	PART NUMBER	DESCRIPTION	QTY	REMARKS
1	JN6-H1100-01-00	STARTER GENERATOR	1	
2	JN3-H1150-00-00	.ARMATURE ASSY	1	
3	93306-20226-00	.BEARING 1 (6202 SD)	1	
4	J10-81158-10-00	.BEARING 2 (6203 SD)	1	
5	J10-81159-10-00	.HOLDER, BEARING	1	
6	JN6-H1110-10-00	.STATOR ASSY	1	
7	JN6-H1160-10-00	.FIELD COIL ASSY	1	
8	J10-81148-10-00	.SCREW 4	2	
9	95380-06600-00	.NUT	4	
10	92990-06600-00	.WASHER, WAVE	2	
11	92995-06100-00	.WASHER, WAVE	4	
12	J10-81146-10-00	.SCREW 2	4	
13	J38-81165-10-00	.BRACKET, STARTER GENERATOR 1	1	
14	J10-81166-10-00	.BRACKET, STARTER GENERATOR 2	1	
15	J10-81147-10-00	.SCREW 3	2	
16	95380-06600-00	.NUT	4	
17	92990-06600-00	.WASHER, WAVE	2	
18	92995-06100-00	.WASHER, WAVE	4	
19	JF2-81119-00-00	.BRUSH HOLDER ASSY	1	
20	JF2-81111-00-00	.BRUSH	4	
21	J38-81113-10-00	.SPRING, BRUSH	4	
22	J10-81115-10-00	.WIRE, LEAD	2	
23	98507-05016-00	.SCREW, PAN HEAD	2	
24	98580-04010-00	.SCREW, PAN HEAD	4	
25	J10-81129-10-00	.COVER, BRUSH	4	
26	J10-81145-10-00	.SCREW 1	2	
27	92990-06600-00	.WASHER, PLAIN	2	

FIG. 32 STARTER GENERATOR

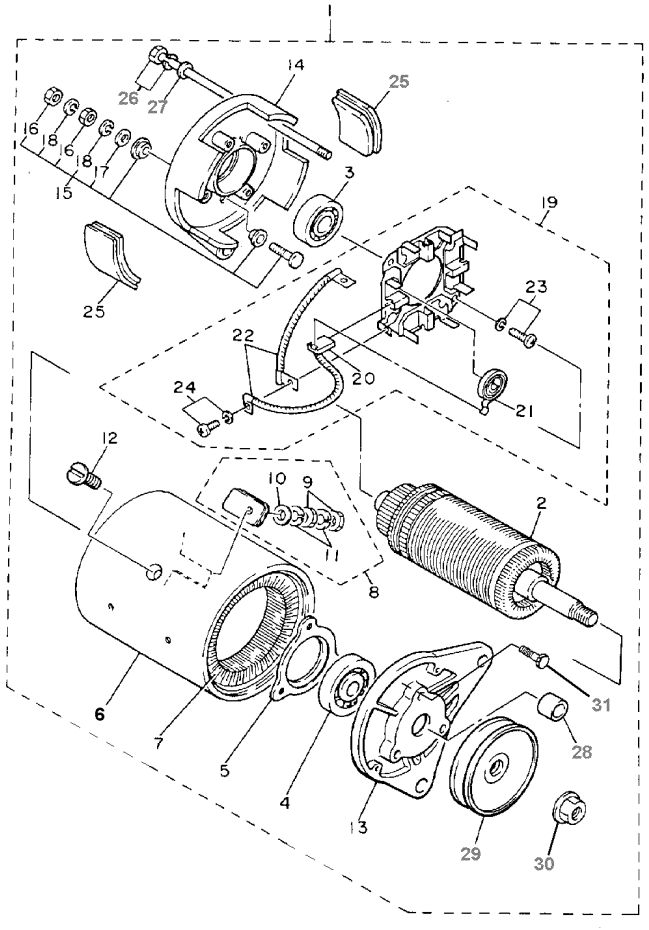

REF NO.	PART NUMBER	DESCRIPTION	QTY	REMARKS
28	JN3-H1661-00-00	.SPACER	1	
29	JN3-H1161-00-00	.PULLEY	2	
30	90179-16889-00	.NUT, FLANGE	1	
31	98507-05018-00	.SCREW	3	

FWD

JN6100-6231

FIG. 33 ELECTRICAL 1

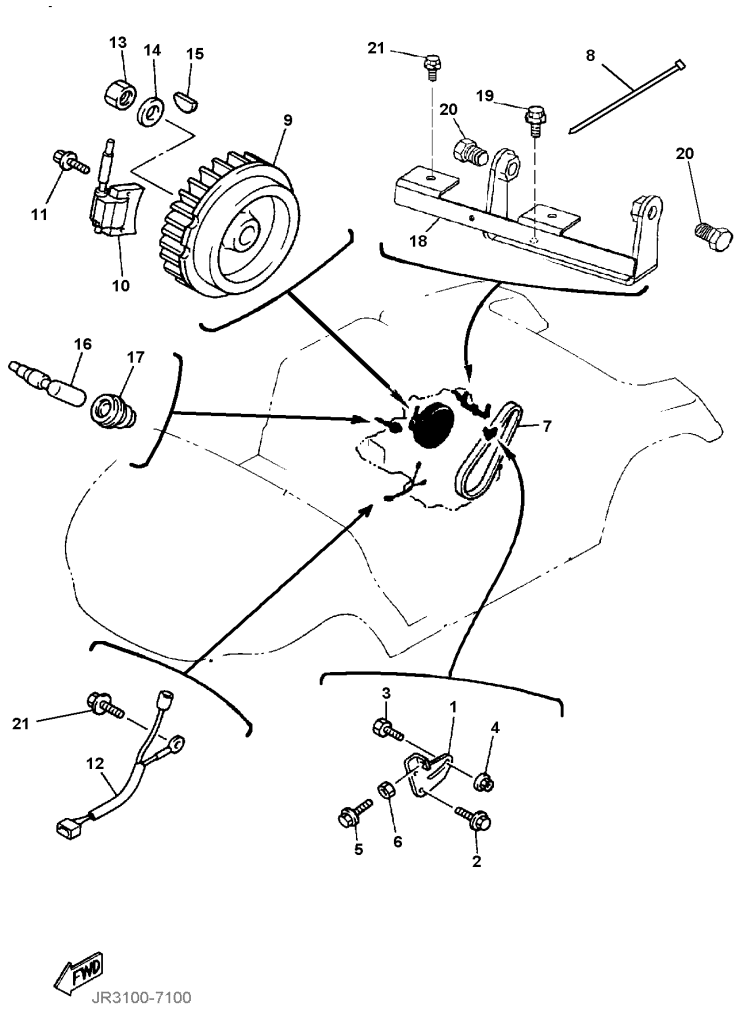

REF NO.	PART NUMBER	DESCRIPTION	QTY	REMARKS
1	JN6-H1170-00-00	TENSIONER ASSY.	1	
2	95817-08020-00	BOLT, FLANGE	2	
3	90109-087A5-00	BOLT	1	
4	95707-08500-00	NUT, FLANGE	1	
5	90107-06035-00	BOLT, HEX.	1	
6	95317-06600-00	NUT, HEX.	1	
7	JN6-H1173-00-00	BELT	1	
8	90464-09823-00	CLAMP	1	
9	JR7-85650-00-00	ROTOR ASSY.	1	
10	JN6-85640-00-00	T.C.I. UNIT	1	
11	95817-06025-00	BOLT, FLANGE	2	
12	JN6-82318-00-00	WIRE, SUB-LEAD	1	
13	95307-18600-00	NUT, HEX.	1	
14	90201-18620-00	WASHER, PLAIN	1	
15	90280-04052-00	KEY, WOODRUFF	1	
16	85G-82370-20-00	PLUG CAP ASSY	1	
17	JE8-82372-00-00	SEAL, PLUG CAP	1	
18	JN6-H1171-00-00	BRACKET, STARTER GENERATOR	1	
19	95817-08020-00	BOLT, FLANGE	2	
20	95817-12025-00	BOLT, FLANGE	2	
21	95817-06016-00	BOLT, FLANGE	3	

FIG. 34 ELECTRICAL 2

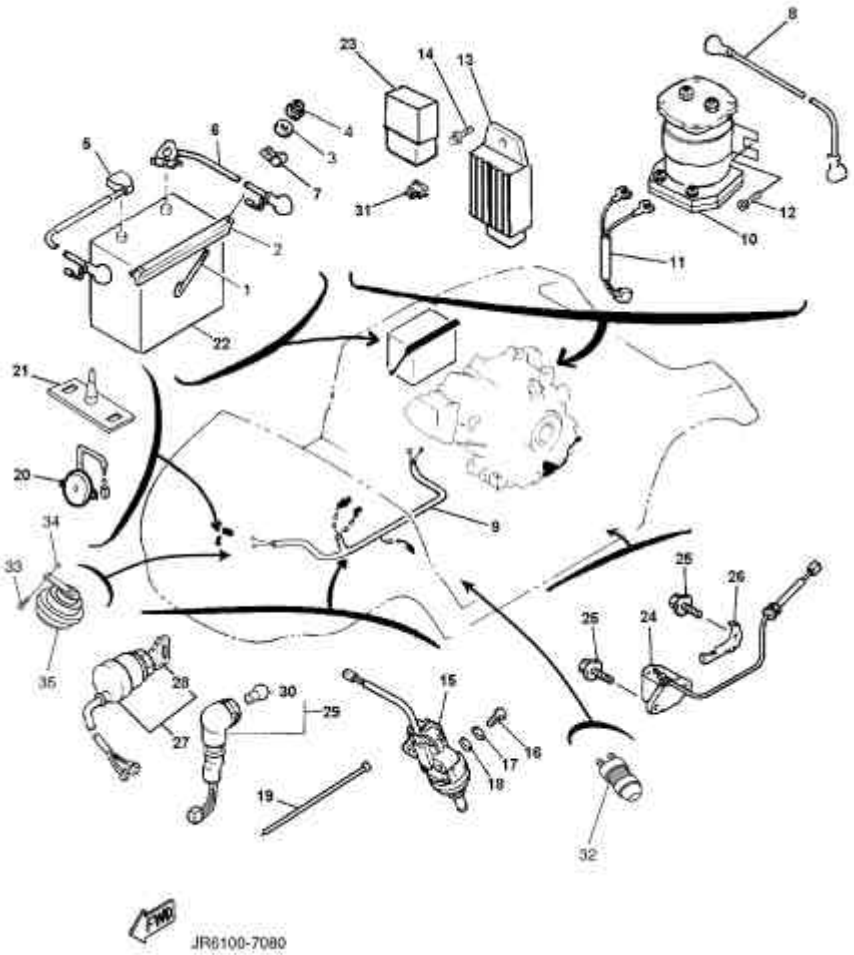

REF NO.	PART NUMBER	DESCRIPTION	QTY	REMARKS
1	JN3-H2133-00-00	SCREW, FITTING	2	
2	J55-H2136-00-00	PLATE, BATTERY	1	
3	92907-06200-00	WASHER, PLAIN	2	
4	95707-06500-00	NUT, FLANGE	2	
5	JR3-H2115-00-00	WIRE, PLUS LEAD	1	
6	JR3-H2116-00-00	WIRE, MINUS LEAD	1	
7	90461-08031-00	CLAMP	2	
8	JR3-H2117-00-00	WIRE, LEAD	1	
9	JR6-H2590-00-00	WIRE HARNESS	1	WITH FUSE
10	JR3-H1950-00-00	RELAY ASSY.	1	
11	JN6-H2105-00-00	HARNESS, WIRE	1	
12	90163-06005-00	SCREW, HEX. T	2	
13	JF2-81910-01-00	VOLTAGE REGULATOR	1	
14	95817-06016-00	BOLT, FLANGE	1	
15	JF7-82817-20-00	SWITCH, ACCELERATOR STOP	1	
16	98507-05025-00	SCREW, PAN HEAD	2	
17	92907-05100-00	WASHER, LOCK	2	
18	92907-05600-00	WASHER, PLATE	2	
19	90464-31827-00	CLAMP	6	
20	JR1-H3383-01-00	BUZZER	1	
21	JN6-H3386-00-00	STAY, BUZZER	1	
22	*	BATTERY ASSY.	1	LM
23	4U8-81950-02-00	RELAY ASSY.	1	
24	JN6-85720-12-00	OIL LEVEL GAUGE	1	
25	95817-06012-00	BOLT, FLANGE	4	
26	JN6-85724-00-00	CLAMP, OIL LEVEL	1	
27	JN8-82510-01-00	MAIN SWITCH	1	

FIG. 34 ELECTRICAL 2

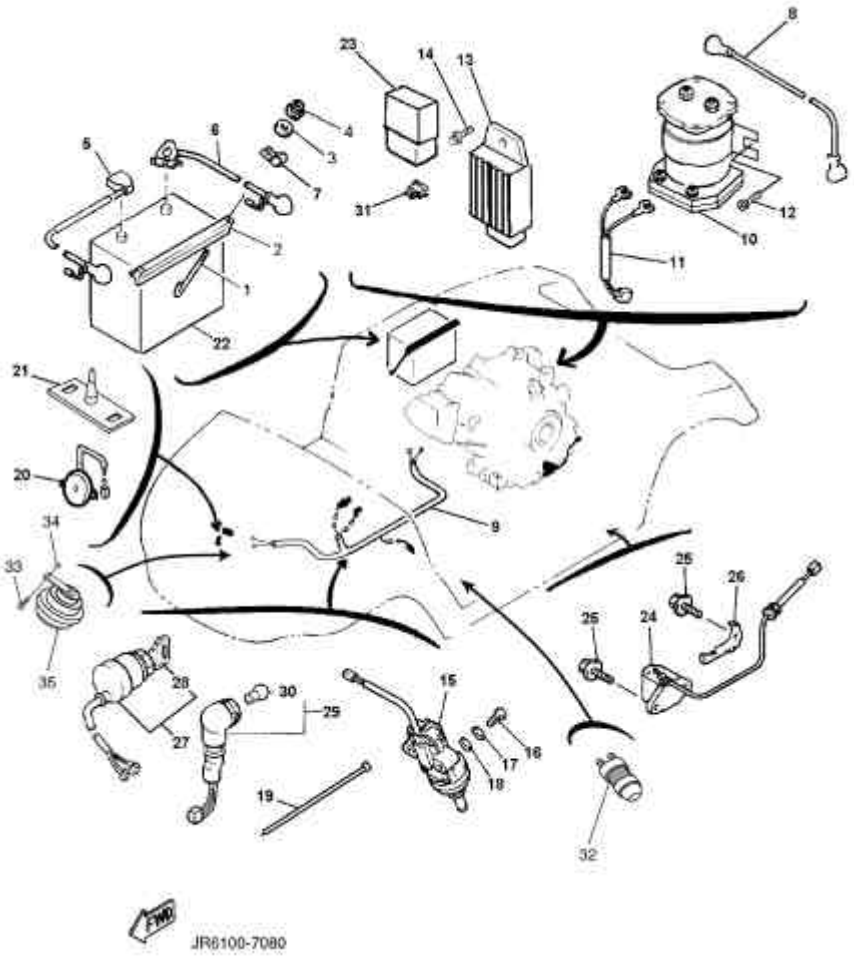

REF	PART NUMBER	DESCRIPTION	QTY	REMARKS
28	J44-82511-00-YY	.KEY, MAIN SWITCH	1	
29	JN6-83530-00-00	PILOT LAMP A	1	
30	123-83516-21-XX	.BULB, (12V-3.4W)	1	
31	42X-82151-00-00	FUSE (10A-BLADE)	1	
32	JR7-H270X-00-00	SWITCH, HORN COMP	1	
33	9582P-06012-00	BOLT, FLANGE	1	
34	95707-06500-00	NUT, FLANGE	1	
35	4LR-83371-00-00	HORN	1	

CONTENTS

ENGINE	PAGE
Engine Assembly	5
Cylinder Head	6
Crankshaft / Piston	7
Camshaft / Valve	8
Air Shroud / Fan	9
Intake	10
Carburetor	11
Exhaust	12
Crankcase	13

CHASSIS	
Engine Mount	14
Rear Arm / Suspension	15
Frame	16
Front Suspension / Wheel	17 ~ 18
Steering	19 ~ 20
Fuel Tank	21
Brake	22 ~ 24
Brake 2	25
Brake 3	26
Accelerator	27
Governor	28
Primary Clutch	29
Secondary Sheave	30

	PAGE
Transmission	31 ~ 33
Rear Axle Mount / Wheel	34
Shifter / Cables	35
Bumper	36
Body (Front)	37 ~ 38
Body 2 (Rear)	39
Body Fitting	40
Carrier	41 ~ 42
Seat	43
Starter Generator	44 ~ 45
Electrical 1	46
Electrical 2	47 ~ 48